11-24-1998

FORM PTO-1594
1-31-92

REC
T

100907317

U.S. DEPARTMENT OF COMMERCE
Patent and Trademark Office

MRD 11.20.98

Tab settings ▼ ▼

To the Honorable Commissioner of Patents and Trademarks: Please record the attached original documents or copy thereof.

1. Name of conveying party(ies): Home Products International, Inc.

☐ Individual(s) ☐ Association

☐ General Partnership ☐ Limited Partnership

☐√ Corporation-State (DE)

☐ Other _____

Additional name(s) of conveying party(ies) attached? ☐√ Yes ☐ No

2. Name and address of receiving party(ies):

Name: The Chase Manhattan Bank, as Administrative Agent

Internal Address: _____

Street Address: 200 Jericho Quadrangle

City: Jericho State: New York ZIP: 11753

☐ Individual(s) citizenship _____

☐ Association _____

☐ General Partnership _____

☐ Limited Partnership _____

☐ Corporation-State _____

☐√ Other New York banking corporation

If assignee is not domiciled in the United States, a domestic representative designation is attached: ☐ Yes ☐√ No

(Designation must be a separate document from Assignment)

Additional name(s) & address(es) attached? ☐ Yes ☐√ No

3. Nature of conveyance:

☐ Assignment ☐ Merger

☐√ Security Agreement ☐ Change of Name

☐ Other _____

Execution Date: September 8, 1998

4. Application number(s) or registration number(s):

A. Trademark Application No.(s) See attached Continuation of Item 4 or Schedule 6 to document

B. Trademark Registration No.(s) See attached Continuation of Item 4 or Schedule 6 to document

Additional numbers attached? ☐√ Yes ☐ No

5. Name and address of party to whom correspondence concerning document should be mailed:

Name: Lori E. Lesser, Esq.

Internal Address: Simpson Thacher & Bartlett

11/24/1998 JSHABAZZ 00000041 1704252

01 FC:481 40.00 OP

02 FC:482 3000.00 OP

Street Address: 425 Lexington Avenue

City: New York State: New York ZIP: 10017

6. Total number of applications and registrations involved: 121

E

7. Total fee (37 CFR 3.41): $3,040

☐√ Enclosed

☐ Authorized to be charged to deposit account

8. Deposit account number:

(Attached duplicate copy of this page if paying by deposit account)

DO NOT USE THIS SPACE

9. Statement and signature.

To the best of my knowledge and belief, the foregoing information is true and correct and any attached copy is a true copy of the original document.

Lori E. Lesser, Esq.	L. E. L	11-18-98
Name of Person Signing	Signature	Date

Total number of pages comprising cover sheet: 7

Mail documents to be recorded with required cover sheet information to:
Commissioner of Patents and Trademarks, Box Assignments
Washington, D.C. 20231

CONTINUATION OF ITEM ONE FROM RECORDATION COVER SHEET

1. Name of conveying party(ies):

SELFIX, INC. (DE Corporation)

TAMOR CORPORATION (MA Corporation)

SEYMOUR HOUSEWARES CORPORATION (DE Corporation)

SHUTTERS, INC. (IL Corporation)

PRESTIGE PLASTICS, INC. (IL Corporation)

CONTINUATION OF ITEM FOUR FROM RECORDATION COVER SHEET

4. Application number(s) or registration number(s):

Serial/ Registration No.
1,704,252
655,229
230,521
655,026
652,951
686,612
768,940
860,505
1,107,171
1,146,430
1,468,329
1,547,440
1,546,473
1,607,502
1,649,505
1,734,640
1,673,485
1,690,224
1,690,225
1,777,909
1,759,932
1,729,420
1,729,421
1,727,687
1,751,321
1,813,613

Serial/ Registration No.
1,867,666
1,363,409
1,476,871
388,320
691,644
752,930
771,851
1,187,725
1,395,733
1,405,010
1,507,217
1,569,803
1,101,531
1,991,617
2,019,770
2,050,046
2,058,476
2,074,244
1,826,373
2,089,547
1,236,165
1,439,197
1,798,717
1,406,775
1,251,159
1,710,770
1,642,448
1,542,546

Serial/ Registration No.
1,598,637
1,714,674
873,315
1,853,091
75/264,337
1,447,127
75/264,425
1,191,202
1,156,424
1,421,109
2,060,022
1,268,630
896,315
1,423,939
1,229,795
2,024,341
1,457,450
2,044,731
1,061,097
817,656
902,488
938,467
1,197,305
1,596,479
1,555,801
924,581
75/182,854
1,394,905

Serial/ Registration No.
1,349,644
1,160,155
1,798,716
1,248,364
1,155,728
1,149,434
1,179,331
1,288,482
1,334,294
1,070,286
1,645,272
1,788,182
1,923,680
1,917,978
1,680,427
1,756,275
1,399,047
1,330,914
838,990
1,488,511
743,608
1,580,141
1,580,142
1,815,940
1,988,568
861,216
939,320
1,135,775

Serial/ Registration No.
1,148,955
1,590,927
1,869,622
1,409,462
1,863,234
1,864,748
1,835,039
75/034,759
1,868,349
1,992,582
2,064,464

EXHIBIT A

AMENDED AND RESTATED GUARANTEE AND COLLATERAL AGREEMENT

made by

HOME PRODUCTS INTERNATIONAL, INC.

and certain of its Subsidiaries

in favor of

THE CHASE MANHATTAN BANK,
as Administrative Agent

Dated as of September 8, 1998

Page

6.4 Proceeds to be Turned Over To Administrative Agent 20
6.5 Application of Proceeds 20
6.6 Code and Other Remedies 21
6.7 Registration Rights 21
6.8 Waiver; Deficiency 22

SECTION 7. THE ADMINISTRATIVE AGENT 23
7.1 Administrative Agent's Appointment as Attorney-in-Fact, etc 23
7.2 Duty of Administrative Agent 24
7.3 Execution of Financing Statements 25
7.4 Authority of Administrative Agent 25

SECTION 8. MISCELLANEOUS 25
8.1 Amendments in Writing 25
8.2 Notices 25
8.3 No Waiver by Course of Conduct; Cumulative Remedies 26
8.4 Enforcement Expenses; Indemnification 26
8.5 Successors and Assigns 26
8.6 Set-Off 27
8.7 Counterparts 27
8.8 Severability 27
8.9 Section Headings 27
8.10 Integration 27
8.11 GOVERNING LAW 28
8.12 Submission To Jurisdiction; Waivers 28
8.13 Acknowledgements 28
8.14 Additional Grantors 29
8.15 Releases 29
8.16 WAIVER OF JURY TRIAL 29

SCHEDULES

Schedule 1 Notice Addresses
Schedule 2 Investment Property
Schedule 3 Perfection Matters
Schedule 4 Jurisdictions of Organization and Chief Executive Offices
Schedule 5 Inventory and Equipment Locations
Schedule 6 Intellectual Property

TRADEMARK
REEL: 1815 FRAME: 0699

TABLE OF CONTENTS

	Page
SECTION 1. DEFINED TERMS	1
1.1 Definitions	1
1.2 Other Definitional Provisions	5
SECTION 2. GUARANTEE	6
2.1 Guarantee	6
2.2 Right of Contribution	7
2.3 No Subrogation	7
2.4 Amendments, etc. with respect to the Borrower Obligations	7
2.5 Guarantee Absolute and Unconditional	8
2.6 Reinstatement	9
2.7 Payments	9
SECTION 3. GRANT OF SECURITY INTEREST	9
SECTION 4. REPRESENTATIONS AND WARRANTIES	10
4.1 Title; No Other Liens	10
4.2 Perfected First Priority Liens	10
4.3 Chief Executive Office	10
4.4 Inventory and Equipment	10
4.5 Farm Products	11
4.6 Investment Property	11
4.7 Receivables	11
4.8 Intellectual Property	11
SECTION 5. COVENANTS	12
5.1 Delivery of Instruments, Certificated Securities and Chattel Paper	12
5.2 Maintenance of Insurance	12
5.3 Payment of Obligations	13
5.4 Maintenance of Perfected Security Interest; Further Documentation	13
5.5 Changes in Locations, Name, etc.	13
5.6 Notices	14
5.7 Investment Property	14
5.8 Receivables	15
5.9 Intellectual Property	16
5.10 Other Matters	17
SECTION 6. REMEDIAL PROVISIONS	18
6.1 Certain Matters Relating to Receivables	18
6.2 Communications with Obligors; Grantors Remain Liable	18
6.3 Pledged Stock	19

TRADEMARK
REEL: 1815 FRAME: 0700

AMENDED AND RESTATED GUARANTEE AND COLLATERAL AGREEMENT

AMENDED AND RESTATED GUARANTEE AND COLLATERAL AGREEMENT, dated as of September 8, 1998, made by each of the signatories hereto (together with any other entity that may become a party hereto as provided herein, the "Grantors"), in favor of THE CHASE MANHATTAN BANK, as Administrative Agent (in such capacity, the "Administrative Agent") for the banks and other financial institutions (the "Lenders") from time to time parties to the Amended and Restated Credit Agreement, dated as of September 8, 1998 (as amended, supplemented or otherwise modified from time to time, the "Credit Agreement"), among Home Products International, Inc. (the "Borrower"), the Lenders and the Administrative Agent.

W I T N E S S E T H:

WHEREAS, pursuant to the Credit Agreement, the Lenders have severally agreed to make extensions of credit to the Borrower upon the terms and subject to the conditions set forth therein;

WHEREAS, the Borrower is a member of an affiliated group of companies that includes each other Grantor;

WHEREAS, the proceeds of the extensions of credit under the Credit Agreement will be used in part to enable the Borrower to make valuable transfers to one or more of the other Grantors in connection with the operation of their respective businesses;

WHEREAS, the Borrower and the other Grantors are engaged in related businesses, and each Grantor will derive substantial direct and indirect benefit from the making of the extensions of credit under the Credit Agreement; and

WHEREAS, it is a condition precedent to the obligation of the Lenders to make their respective extensions of credit to the Borrower under the Credit Agreement that the Grantors shall have executed and delivered this Agreement to the Administrative Agent for the ratable benefit of the Lenders;

NOW, THEREFORE, in consideration of the premises and to induce the Administrative Agent and the Lenders to enter into the Credit Agreement and to induce the Lenders to make their respective extensions of credit to the Borrower thereunder, each Grantor hereby agrees with the Administrative Agent, for the ratable benefit of the Lenders, as follows:

SECTION 1. DEFINED TERMS

1.1 Definitions. (a) Unless otherwise defined herein, terms defined in the Credit Agreement and used herein shall have the meanings given to them in the Credit Agreement, and the following terms are used herein as defined in the New York UCC: Accounts, Certificated Security, Chattel Paper, Documents, Equipment, Farm Products, Instruments and Inventory.

(b) The following terms shall have the following meanings:

"Agreement": this Amended and Restated Guarantee and Collateral Agreement, as the same may be amended, supplemented or otherwise modified from time to time.

"Borrower Obligations": the collective reference to the unpaid principal of and interest on the Loans and Reimbursement Obligations and all other obligations and liabilities of the Borrower (including, without limitation, interest accruing at the then applicable rate provided in the Credit Agreement after the maturity of the Loans and Reimbursement Obligations and interest accruing at the then applicable rate provided in the Credit Agreement after the filing of any petition in bankruptcy, or the commencement of any insolvency, reorganization or like proceeding, relating to the Borrower, whether or not a claim for post-filing or post-petition interest is allowed in such proceeding) to the Administrative Agent or any Lender (or, in the case of any Lender Hedge Agreement, any Affiliate of any Lender), whether direct or indirect, absolute or contingent, due or to become due, or now existing or hereafter incurred, which may arise under, out of, or in connection with, the Credit Agreement, this Agreement, the other Loan Documents, any Letter of Credit, any Lender Hedge Agreement or any other document made, delivered or given in connection with any of the foregoing, in each case whether on account of principal, interest, reimbursement obligations, fees, indemnities, costs, expenses or otherwise (including, without limitation, all fees and disbursements of counsel to the Administrative Agent or to the Lenders that are required to be paid by the Borrower pursuant to the terms of any of the foregoing agreements).

"Collateral": as defined in Section 3.

"Collateral Account": any collateral account established by the Administrative Agent as provided in Section 6.1 or 6.4.

"Copyrights": (i) all copyrights arising under the laws of the United States, any other country or any political subdivision thereof, whether registered or unregistered and whether published or unpublished (including, without limitation, those listed in Schedule 6), all registrations and recordings thereof, and all applications in connection therewith, including, without limitation, all registrations, recordings and applications in the United States Copyright Office, and (ii) the right to obtain all renewals thereof.

TRADEMARK
REEL: 1815 FRAME: 0702

"Copyright Licenses": any written agreement naming any Grantor as licensor or licensee (including, without limitation, those listed in Schedule 6), granting any right under any Copyright, including, without limitation, the grant of rights to manufacture, distribute, exploit and sell materials derived from any Copyright.

"Deposit Account": as defined in the Uniform Commercial Code of any applicable jurisdiction and, in any event, including, without limitation, any demand, time, savings, passbook or like account maintained with a depositary institution.

"Foreign Subsidiary": any Subsidiary organized under the laws of any jurisdiction outside the United States of America.

"Foreign Subsidiary Voting Stock": the voting Capital Stock of any Foreign Subsidiary.

"General Intangibles": all "general intangibles" as such term is defined in Section 9-106 of the New York UCC and, in any event, including, without limitation, with respect to any Grantor, all contracts, agreements, instruments and indentures in any form, and portions thereof, to which such Grantor is a party or under which such Grantor has any right, title or interest or to which such Grantor or any property of such Grantor is subject, as the same may from time to time be amended, supplemented or otherwise modified, including, without limitation, (i) all rights of such Grantor to receive moneys due and to become due to it thereunder or in connection therewith, (ii) all rights of such Grantor to damages arising thereunder and (iii) all rights of such Grantor to perform and to exercise all remedies thereunder, in each case to the extent the grant by such Grantor of a security interest pursuant to this Agreement in its right, title and interest in such contract, agreement, instrument or indenture is not prohibited by such contract, agreement, instrument or indenture without the consent of any other party thereto, would not give any other party to such contract, agreement, instrument or indenture the right to terminate its obligations thereunder, or is permitted with consent if all necessary consents to such grant of a security interest have been obtained from the other parties thereto (it being understood that the foregoing shall not be deemed to obligate such Grantor to obtain such consents); provided, that the foregoing limitation shall not affect, limit, restrict or impair the grant by such Grantor of a security interest pursuant to this Agreement in any Receivable or any money or other amounts due or to become due under any such contract, agreement, instrument or indenture.

"Guarantor Obligations": with respect to any Guarantor, all obligations and liabilities of such Guarantor which may arise under or in connection with this Agreement (including, without limitation, Section 2) or any other Loan Document to which such Guarantor is a party, in each case whether on account of guarantee obligations, reimbursement obligations, fees, indemnities, costs, expenses or otherwise (including, without limitation, all fees and disbursements of counsel to the

Administrative Agent or to the Lenders that are required to be paid by such Guarantor pursuant to the terms of this Agreement or any other Loan Document).

"Guarantors": the collective reference to each Grantor other than the Borrower.

"Intellectual Property": the collective reference to all rights, priorities and privileges relating to intellectual property, whether arising under United States, multinational or foreign laws or otherwise, including, without limitation, the Copyrights, the Copyright Licenses, the Patents, the Patent Licenses, the Trademarks and the Trademark Licenses, and all rights to sue at law or in equity for any infringement or other impairment thereof, including the right to receive all proceeds and damages therefrom.

"Intercompany Note": any promissory note evidencing loans made by any Grantor to any other Grantor.

"Investment Property": the collective reference to (i) all "investment property" as such term is defined in Section 9-115 of the New York UCC (other than any Foreign Subsidiary Voting Stock excluded from the definition of "Pledged Stock") and (ii) whether or not constituting "investment property" as so defined, all Pledged Notes and all Pledged Stock. .

"Issuers": the collective reference to each issuer of any Investment Property.

"Lender Hedge Agreements": all interest rate swaps, caps or collar agreements or similar arrangements entered into by the Borrower with any Lender (or any Affiliate of any Lender) providing for protection against fluctuations in interest rates or currency exchange rates or the exchange of nominal interest obligations, either generally or under specific contingencies.

"New York UCC": the Uniform Commercial Code as from time to time in effect in the State of New York.

"Obligations": (i) in the case of the Borrower, the Borrower Obligations, and (ii) in the case of each Guarantor, its Guarantor Obligations.

"Patents": (i) all letters patent of the United States, any other country or any political subdivision thereof, all reissues and extensions thereof and all goodwill associated therewith, including, without limitation, any of the foregoing referred to in Schedule 6, (ii) all applications for letters patent of the United States or any other country and all divisions, continuations and continuations-in-part thereof, including, without limitation, any of the foregoing referred to in Schedule 6, and (iii) all rights to obtain any reissues or extensions of the foregoing.

"Patent License": all agreements, whether written or oral, providing for the grant by or to any Grantor of any right to manufacture, use or sell any invention covered in whole or in part by a Patent, including, without limitation, any of the foregoing referred to in Schedule 6.

"Pledged Notes": all promissory notes listed on Schedule 2, all Intercompany Notes at any time issued to any Grantor and all other promissory notes issued to or held by any Grantor (other than (i) promissory notes issued in connection with extensions of trade credit by any Grantor in the ordinary course of business and (ii) any individual promissory note which is less than $25,000 in principal amount, up to an aggregate of $100,000 for all such promissory notes excluded under this clause (ii)).

"Pledged Stock": the shares of Capital Stock listed on Schedule 2, together with any other shares, stock certificates, options or rights of any nature whatsoever in respect of the Capital Stock of any Person that may be issued or granted to, or held by, any Grantor while this Agreement is in effect; provided that in no event shall more than 65% of the total outstanding Foreign Subsidiary Voting Stock of any Foreign Subsidiary be required to be pledged hereunder or, following any change in applicable law, such greater or lesser percentage which would not result in adverse tax consequences.

"Proceeds": all "proceeds" as such term is defined in Section 9-306(1) of the New York UCC and, in any event, shall include, without limitation, all dividends or other income from the Investment Property, collections thereon or distributions or payments with respect thereto.

"Receivable": any right to payment for goods sold or leased or for services rendered, whether or not such right is evidenced by an Instrument or Chattel Paper and whether or not it has been earned by performance (including, without limitation, any Account).

"Securities Act": the Securities Act of 1933, as amended.

"Trademarks": (i) all trademarks, trade names, corporate names, company names, business names, fictitious business names, trade styles, service marks, logos and other source or business identifiers, and all goodwill associated therewith, now existing or hereafter adopted or acquired, all registrations and recordings thereof, and all applications in connection therewith, whether in the United States Patent and Trademark Office or in any similar office or agency of the United States, any State thereof or any other country or any political subdivision thereof, or otherwise, and all common-law rights related thereto, including, without limitation, any of the foregoing referred to in Schedule 6, and (ii) the right to obtain all renewals thereof.

"Trademark License": any agreement, whether written or oral, providing for the grant by or to any Grantor of any right to use any Trademark, including, without limitation, any of the foregoing referred to in Schedule 6.

1.2 Other Definitional Provisions. (a) The words "hereof," "herein", "hereto" and "hereunder" and words of similar import when used in this Agreement shall refer to this Agreement as a whole and not to any particular provision of this Agreement, and Section and Schedule references are to this Agreement unless otherwise specified.

(b) The meanings given to terms defined herein shall be equally applicable to both the singular and plural forms of such terms.

(c) Where the context requires, terms relating to the Collateral or any part thereof, when used in relation to a Grantor, shall refer to such Grantor's Collateral or the relevant part thereof.

SECTION 2. GUARANTEE

2.1 Guarantee. (a) Each of the Guarantors hereby, jointly and severally, unconditionally and irrevocably, guarantees to the Administrative Agent, for the ratable benefit of the Lenders and their respective successors, indorsees, transferees and assigns, the prompt and complete payment and performance by the Borrower when due (whether at the stated maturity, by acceleration or otherwise) of the Borrower Obligations.

(b) Anything herein or in any other Loan Document to the contrary notwithstanding, the maximum liability of each Guarantor hereunder and under the other Loan Documents shall in no event exceed the amount which can be guaranteed by such Guarantor under applicable federal and state laws relating to the insolvency of debtors (after giving effect to the right of contribution established in Section 2.2).

(c) Each Guarantor agrees that the Borrower Obligations may at any time and from time to time exceed the amount of the liability of such Guarantor hereunder without impairing the guarantee contained in this Section 2 or affecting the rights and remedies of the Administrative Agent or any Lender hereunder.

(d) The guarantee contained in this Section 2 shall remain in full force and effect until all the Borrower Obligations and the obligations of each Guarantor under the guarantee contained in this Section 2 shall have been satisfied by payment in full, no Letter of Credit shall be outstanding and the Commitments shall be terminated, notwithstanding that from time to time during the term of the Credit Agreement the Borrower may be free from any Borrower Obligations.

(e) No payment made by the Borrower, any of the Guarantors, any other guarantor or any other Person or received or collected by the Administrative Agent or any

Lender from the Borrower, any of the Guarantors, any other guarantor or any other Person by virtue of any action or proceeding or any set-off or appropriation or application at any time or from time to time in reduction of or in payment of the Borrower Obligations shall be deemed to modify, reduce, release or otherwise affect the liability of any Guarantor hereunder which shall, notwithstanding any such payment (other than any payment made by such Guarantor in respect of the Borrower Obligations or any payment received or collected from such Guarantor in respect of the Borrower Obligations), remain liable for the Borrower Obligations up to the maximum liability of such Guarantor hereunder until the Borrower Obligations are paid in full, no Letter of Credit shall be outstanding and the Commitments are terminated.

2.2 Right of Contribution. Each Guarantor hereby agrees that to the extent that a Guarantor shall have paid more than its proportionate share of any payment made hereunder, such Guarantor shall be entitled to seek and receive contribution from and against any other Guarantor hereunder which has not paid its proportionate share of such payment. Each Guarantor's right of contribution shall be subject to the terms and conditions of Section 2.3. The provisions of this Section 2.2 shall in no respect limit the obligations and liabilities of any Guarantor to the Administrative Agent and the Lenders, and each Guarantor shall remain liable to the Administrative Agent and the Lenders for the full amount guaranteed by such Guarantor hereunder.

2.3 No Subrogation. Notwithstanding any payment made by any Guarantor hereunder or any set-off or application of funds of any Guarantor by the Administrative Agent or any Lender, no Guarantor shall be entitled to be subrogated to any of the rights of the Administrative Agent or any Lender against the Borrower or any other Guarantor or any collateral security or guarantee or right of offset held by the Administrative Agent or any Lender for the payment of the Borrower Obligations, nor shall any Guarantor seek or be entitled to seek any contribution or reimbursement from the Borrower or any other Guarantor in respect of payments made by such Guarantor hereunder, until all amounts owing to the Administrative Agent and the Lenders by the Borrower on account of the Borrower Obligations are paid in full, no Letter of Credit shall be outstanding and the Commitments are terminated. If any amount shall be paid to any Guarantor on account of such subrogation rights at any time when all of the Borrower Obligations shall not have been paid in full, such amount shall be held by such Guarantor in trust for the Administrative Agent and the Lenders, segregated from other funds of such Guarantor, and shall, forthwith upon receipt by such Guarantor, be turned over to the Administrative Agent in the exact form received by such Guarantor (duly indorsed by such Guarantor to the Administrative Agent, if required), to be applied against the Borrower Obligations, whether matured or unmatured, in such order as the Administrative Agent may determine.

2.4 Amendments, etc. with respect to the Borrower Obligations. Each Guarantor shall remain obligated hereunder notwithstanding that, without any reservation of rights against any Guarantor and without notice to or further assent by any Guarantor, any demand for payment of any of the Borrower Obligations made by the Administrative Agent or any Lender may be rescinded by the Administrative Agent or such Lender and any of the Borrower Obligations continued, and the Borrower Obligations, or the liability of any other

TRADEMARK
REEL: 1815 FRAME: 0707

Person upon or for any part thereof, or any collateral security or guarantee therefor or right of offset with respect thereto, may, from time to time, in whole or in part, be renewed, extended, amended, modified, accelerated, compromised, waived, surrendered or released by the Administrative Agent or any Lender, and the Credit Agreement and the other Loan Documents and any other documents executed and delivered in connection therewith may be amended, modified, supplemented or terminated, in whole or in part, as the Administrative Agent (or the Required Lenders or all Lenders, as the case may be) may deem advisable from time to time, and any collateral security, guarantee or right of offset at any time held by the Administrative Agent or any Lender for the payment of the Borrower Obligations may be sold, exchanged, waived, surrendered or released. Neither the Administrative Agent nor any Lender shall have any obligation to protect, secure, perfect or insure any Lien at any time held by it as security for the Borrower Obligations or for the guarantee contained in this Section 2 or any property subject thereto.

2.5 Guarantee Absolute and Unconditional. Each Guarantor waives any and all notice of the creation, renewal, extension or accrual of any of the Borrower Obligations and notice of or proof of reliance by the Administrative Agent or any Lender upon the guarantee contained in this Section 2 or acceptance of the guarantee contained in this Section 2; the Borrower Obligations, and any of them, shall conclusively be deemed to have been created, contracted or incurred, or renewed, extended, amended or waived, in reliance upon the guarantee contained in this Section 2; and all dealings between the Borrower and any of the Guarantors, on the one hand, and the Administrative Agent and the Lenders, on the other hand, likewise shall be conclusively presumed to have been had or consummated in reliance upon the guarantee contained in this Section 2. Each Guarantor waives diligence, presentment, protest, demand for payment and notice of default or nonpayment to or upon the Borrower or any of the Guarantors with respect to the Borrower Obligations. Each Guarantor understands and agrees that the guarantee contained in this Section 2 shall be construed as a continuing, absolute and unconditional guarantee of payment without regard to (a) the validity or enforceability of the Credit Agreement or any other Loan Document, any of the Borrower Obligations or any other collateral security therefor or guarantee or right of offset with respect thereto at any time or from time to time held by the Administrative Agent or any Lender, (b) any defense, set-off or counterclaim (other than a defense of payment or performance) which may at any time be available to or be asserted by the Borrower or any other Person against the Administrative Agent or any Lender, or (c) any other circumstance whatsoever (with or without notice to or knowledge of the Borrower or such Guarantor) which constitutes, or might be construed to constitute, an equitable or legal discharge of the Borrower for the Borrower Obligations, or of such Guarantor under the guarantee contained in this Section 2, in bankruptcy or in any other instance. When making any demand hereunder or otherwise pursuing its rights and remedies hereunder against any Guarantor, the Administrative Agent or any Lender may, but shall be under no obligation to, make a similar demand on or otherwise pursue such rights and remedies as it may have against the Borrower, any other Guarantor or any other Person or against any collateral security or guarantee for the Borrower Obligations or any right of offset with respect thereto, and any failure by the Administrative Agent or any Lender to make any such demand, to pursue such other rights or remedies or to collect any payments from the Borrower, any other Guarantor or any other Person or to realize upon any

such collateral security or guarantee or to exercise any such right of offset, or any release of the Borrower, any other Guarantor or any other Person or any such collateral security, guarantee or right of offset, shall not relieve any Guarantor of any obligation or liability hereunder, and shall not impair or affect the rights and remedies, whether express, implied or available as a matter of law, of the Administrative Agent or any Lender against any Guarantor. For the purposes hereof "demand" shall include the commencement and continuance of any legal proceedings.

2.6 Reinstatement. The guarantee contained in this Section 2 shall continue to be effective, or be reinstated, as the case may be, if at any time payment, or any part thereof, of any of the Borrower Obligations is rescinded or must otherwise be restored or returned by the Administrative Agent or any Lender upon the insolvency, bankruptcy, dissolution, liquidation or reorganization of the Borrower or any Guarantor, or upon or as a result of the appointment of a receiver, intervenor or conservator of, or trustee or similar officer for, the Borrower or any Guarantor or any substantial part of its property, or otherwise, all as though such payments had not been made.

2.7 Payments. Each Guarantor hereby guarantees that payments hereunder will be paid to the Administrative Agent without set-off or counterclaim in Dollars at the office of the Administrative Agent located at 270 Park Avenue, New York, New York 10017.

SECTION 3. GRANT OF SECURITY INTEREST

Each Grantor hereby assigns and transfers to the Administrative Agent, and hereby grants to the Administrative Agent, for the ratable benefit of the Lenders, a security interest in, all of the following property now owned or at any time hereafter acquired by such Grantor or in which such Grantor now has or at any time in the future may acquire any right, title or interest (collectively, the "Collateral"), as collateral security for the prompt and complete payment and performance when due (whether at the stated maturity, by acceleration or otherwise) of such Grantor's Obligations,:

(a) all Accounts;

(b) all Chattel Paper;

(c) all Deposit Accounts;

(d) all Documents;

(e) all Equipment;

(f) all General Intangibles;

(g) all Instruments;

(h) all Intellectual Property;

(i) all Inventory;

(j) all Investment Property;

(k) all other property not otherwise described above;

(l) all books and records pertaining to the Collateral; and

(m) to the extent not otherwise included, all Proceeds and products of any and all of the foregoing and all collateral security and guarantees given by any Person with respect to any of the foregoing.

SECTION 4. REPRESENTATIONS AND WARRANTIES

To induce the Administrative Agent and the Lenders to enter into the Credit Agreement and to induce the Lenders to make their respective extensions of credit to the Borrower thereunder, each Grantor hereby represents and warrants to the Administrative Agent and each Lender that:

4.1 Title; No Other Liens. Except for the security interest granted to the Administrative Agent for the ratable benefit of the Lenders pursuant to this Agreement and the other Liens permitted to exist on the Collateral by the Credit Agreement, such Grantor owns each item of the Collateral free and clear of any and all Liens or claims of others. No financing statement or other public notice with respect to all or any part of the Collateral is on file or of record in any public office, except such as have been filed in favor of the Administrative Agent, for the ratable benefit of the Lenders, pursuant to this Agreement, filings evidencing Liens permitted by the Credit Agreement and filings for which termination statements have been delivered to the Administrative Agent.

4.2 Perfected First Priority Liens. The security interests granted pursuant to this Agreement (a) upon completion of the filings and other actions specified on Schedule 3 (which, in the case of all filings and other documents referred to on said Schedule, have been delivered to the Administrative Agent in completed and duly executed form) will constitute valid perfected security interests in all of the Collateral in favor of the Administrative Agent, for the ratable benefit of the Lenders, as collateral security for such Grantor's Obligations, enforceable in accordance with the terms hereof against all creditors of such Grantor and any Persons purporting to purchase any Collateral from such Grantor and (b) are prior to all other Liens on the Collateral in existence on the date hereof except for Liens permitted by the Credit Agreement.

4.3 Chief Executive Office. On the date hereof, such Grantor's jurisdiction of organization and the location of such Grantor's chief executive office or sole place of business are specified on Schedule 4.

4.4 Inventory and Equipment. On the date hereof, the Inventory and the Equipment (other than mobile goods) are kept at the locations listed on Schedule 5, except with respect to Inventory and Equipment with an aggregate fair market value of less than $500,000 which may be located at other locations.

4.5 Farm Products. None of the Collateral constitutes, or is the Proceeds of, Farm Products.

4.6 Investment Property. (a) The shares of Pledged Stock pledged by such Grantor hereunder constitute all the issued and outstanding shares of all classes of the Capital Stock of each Issuer owned by such Grantor or, in the case of Foreign Subsidiary Voting Stock, if less, 65% of the outstanding Foreign Subsidiary Voting Stock of each relevant Issuer, other than Pledged Stock of Issuers which are not Subsidiaries and which in the aggregate, is immaterial in market value.

(b) All the shares of the Pledged Stock have been duly and validly issued and are fully paid and nonassessable.

(c) Each of the Pledged Notes constitutes the legal, valid and binding obligation of the obligor with respect thereto, enforceable in accordance with its terms, subject to the effects of bankruptcy, insolvency, fraudulent conveyance, reorganization, moratorium and other similar laws relating to or affecting creditors' rights generally, general equitable principles (whether considered in a proceeding in equity or at law) and an implied covenant of good faith and fair dealing.

(d) Such Grantor is the record and beneficial owner of, and has good and marketable title to, the Investment Property pledged by it hereunder, free of any and all Liens or options in favor of, or claims of, any other Person, except the security interest created by this Agreement and except, in the case of Investment Property which does not constitute Pledged Stock or Pledged Notes, for the Liens permitted by Section 7.3 of the Credit Agreement.

4.7 Receivables. (a) No material amount payable to such Grantor under or in connection with any Receivable is evidenced by any Instrument or Chattel Paper which has not been delivered to the Administrative Agent.

(b) None of the obligors on any Receivables is a Governmental Authority.

(c) The amounts represented by such Grantor to the Lenders from time to time as owing to such Grantor in respect of the Receivables (to the extent such representations are required by any of the Loan Documents) will at such times be accurate.

4.8 Intellectual Property. (a) Schedule 6 lists all Intellectual Property owned by such Grantor in its own name on the date hereof.

(b) On the date hereof, all material Intellectual Property is valid, subsisting, unexpired and enforceable, has not been abandoned and, to such Grantor's knowledge, does not infringe the intellectual property rights of any other Person.

(c) Except as set forth in Schedule 6, on the date hereof, none of the material Intellectual Property is the subject of any licensing or franchise agreement pursuant to which such Grantor is the licensor or franchisor.

(d) No holding, decision or judgment has been rendered by any Governmental Authority which would limit, cancel or question the validity of, or such Grantor's rights in, any Intellectual Property in any respect that could reasonably be expected to have a Material Adverse Effect.

(e) No action or proceeding is pending, or, to the knowledge of such Grantor, threatened, on the date hereof (i) seeking to limit, cancel or question the validity of any material Intellectual Property or such Grantor's ownership interest therein, or (ii) which, if adversely determined, would have a material adverse effect on the value of any material Intellectual Property.

SECTION 5. COVENANTS

Each Grantor covenants and agrees with the Administrative Agent and the Lenders that, from and after the date of this Agreement until the Obligations shall have been paid in full, no Letter of Credit shall be outstanding and the Commitments shall have terminated:

5.1 Delivery of Instruments, Certificated Securities and Chattel Paper. If any material amount payable under or in connection with any of the Collateral shall be or become evidenced by any Instrument, Certificated Security or Chattel Paper, such Instrument, Certificated Security or Chattel Paper shall be immediately delivered to the Administrative Agent, duly indorsed in a manner satisfactory to the Administrative Agent, to be held as Collateral pursuant to this Agreement. In the event that an Event of Default shall have occurred and be continuing, upon the request of the Administrative Agent, any Instrument, Certificated Security or Chattel Paper not theretofore delivered to the Administrative Agent and at such time being held by such Grantor shall be immediately delivered to the Administrative Agent, duly indorsed in a manner satisfactory to the Administrative Agent, to be held as Collateral pursuant to this Agreement.

5.2 Maintenance of Insurance. (a) Such Grantor will maintain, with financially sound and reputable companies, insurance policies (i) insuring the Inventory, Equipment and Vehicles against loss by fire, explosion, theft and such other casualties as may be reasonably satisfactory to the Administrative Agent and (ii) insuring such Grantor, the

Administrative Agent and the Lenders against liability for personal injury and property damage relating to such Inventory, Equipment and Vehicles, such policies to be in such form and amounts and having such coverage as may be reasonably satisfactory to the Administrative Agent and the Lenders.

(b) All such insurance shall (i) provide that no cancellation, material reduction in amount or material change in coverage thereof shall be effective until at least 30 days after receipt by the Administrative Agent of written notice thereof, (ii) name the Administrative Agent as insured party or loss payee, (iii) if reasonably requested by the Administrative Agent, include a breach of warranty clause and (iv) be reasonably satisfactory in all other respects to the Administrative Agent.

(c) The Borrower shall deliver to the Administrative Agent and the Lenders a report of a reputable insurance broker with respect to such insurance as the Administrative Agent may from time to time reasonably request.

5.3 Payment of Obligations. Such Grantor will pay and discharge or otherwise satisfy at or before maturity or before they become delinquent, as the case may be, all material taxes, assessments and governmental charges or levies imposed upon the Collateral or in respect of income or profits therefrom, as well as all material claims of any kind (including, without limitation, material claims for labor, materials and supplies) against or with respect to the Collateral, except that no such charge need be paid if the amount or validity thereof is currently being contested in good faith by appropriate proceedings, reserves in conformity with GAAP with respect thereto have been provided on the books of such Grantor and such proceedings could not reasonably be expected to result in the sale, forfeiture or loss of any material portion of the Collateral or any interest therein.

5.4 Maintenance of Perfected Security Interest; Further Documentation. (a) Such Grantor shall maintain the security interest created by this Agreement as a perfected security interest having at least the priority described in Section 4.2 and shall defend such security interest against the claims and demands of all Persons whomsoever.

(b) Such Grantor will furnish to the Administrative Agent and the Lenders from time to time statements and schedules further identifying and describing the assets and property of such Grantor and such other reports in connection therewith as the Administrative Agent may reasonably request, all in reasonable detail.

(c) At any time and from time to time, upon the written request of the Administrative Agent, and at the sole expense of such Grantor, such Grantor will promptly and duly execute and deliver, and have recorded, such further instruments and documents and take such further actions as the Administrative Agent may reasonably request for the purpose of obtaining or preserving the full benefits of this Agreement and of the rights and powers herein granted, including, without limitation, (i) filing any financing or continuation statements under the Uniform Commercial Code (or other similar laws) in effect in any jurisdiction with respect to the security interests created hereby and (ii) in the case of

Investment Property, Deposit Accounts and any other relevant Collateral, taking any actions necessary to enable the Administrative Agent to obtain "control" (within the meaning of the applicable Uniform Commercial Code) with respect thereto.

5.5 Changes in Locations, Name, etc. Such Grantor will not, except upon 15 days' prior written notice to the Administrative Agent and delivery to the Administrative Agent of (a) all additional executed financing statements and other documents reasonably requested by the Administrative Agent to maintain the validity, perfection and priority of the security interests provided for herein and (b) if applicable, a written supplement to Schedule 5 showing any additional location at which Inventory or Equipment shall be kept:

(i) permit any of the Inventory or Equipment (other than mobile goods) to be kept at a location other than those listed on Schedule 5; provided, that up to $500,000 in fair market value of any such Inventory and Equipment may be kept at other locations;

(ii) change its jurisdiction of organization or the location of its chief executive office or sole place of business from that referred to in Section 4.3; or

(iii) change its name, identity or corporate structure to such an extent that any financing statement filed by the Administrative Agent in connection with this Agreement would become misleading.

5.6 Notices. Such Grantor will advise the Administrative Agent and the Lenders promptly, in reasonable detail, of:

(a) any Lien (other than security interests created hereby or Liens permitted under the Credit Agreement) on any of the Collateral which would adversely affect the ability of the Administrative Agent to exercise any of its remedies hereunder; and

(b) the occurrence of any other event which could reasonably be expected to have a material adverse effect on the aggregate value of the Collateral or on the security interests created hereby.

5.7 Investment Property. (a) If such Grantor shall become entitled to receive or shall receive any stock certificate (including, without limitation, any certificate representing a stock dividend or a distribution in connection with any reclassification, increase or reduction of capital or any certificate issued in connection with any reorganization), option or rights in respect of the Capital Stock of any Issuer, whether in addition to, in substitution of, as a conversion of, or in exchange for, any shares of the Pledged Stock, or otherwise in respect thereof, such Grantor shall accept the same as the agent of the Administrative Agent and the Lenders, hold the same in trust for the Administrative Agent and the Lenders and deliver the same forthwith to the Administrative Agent in the exact form received, duly indorsed by such Grantor to the Administrative Agent, if required, together with an undated stock power covering such certificate duly executed in blank by such Grantor and with, if the

TRADEMARK
REEL: 1815 FRAME: 0714

Administrative Agent so requests, signature guaranteed, to be held by the Administrative Agent, subject to the terms hereof, as additional collateral security for the Obligations. Upon the occurrence and during the continuance of an Event of Default, (i) any sums paid upon or in respect of the Investment Property upon the liquidation or dissolution of any Issuer shall be paid over to the Administrative Agent to be held by it hereunder as additional collateral security for the Obligations, and (ii) in case any distribution of capital shall be made on or in respect of the Investment Property or any property shall be distributed upon or with respect to the Investment Property pursuant to the recapitalization or reclassification of the capital of any Issuer or pursuant to the reorganization thereof, the property so distributed shall, unless otherwise subject to a perfected security interest in favor of the Administrative Agent, be delivered to the Administrative Agent to be held by it hereunder as additional collateral security for the Obligations. Upon the occurrence and during the continuance of an Event of Default, if any sums of money or property so paid or distributed in respect of the Investment Property shall be received by such Grantor, such Grantor shall, until such money or property is paid or delivered to the Administrative Agent, hold such money or property in trust for the Lenders, segregated from other funds of such Grantor, as additional collateral security for the Obligations.

(b) Without the prior written consent of the Administrative Agent, such Grantor will not (i) vote to enable, or take any other action to permit, any Issuer to issue any stock or other equity securities of any nature or to issue any other securities convertible into or granting the right to purchase or exchange for any stock or other equity securities of any nature of any Issuer, (ii) sell, assign, transfer, exchange, or otherwise dispose of, or grant any option with respect to, the Investment Property or Proceeds thereof (except pursuant to a transaction expressly permitted by the Credit Agreement) other than, with respect to Investment Property not constituting Pledged Stock or Pledged Notes, any such action which is not prohibited by the Credit Agreement, (iii) create, incur or permit to exist any Lien or option in favor of, or any claim of any Person with respect to, any of the Investment Property or Proceeds thereof, or any interest therein, except for the security interests created by this Agreement or Liens arising by operation of law or, with respect to Investment Property not constituting Pledged Stock or Pledged Notes, as may be permitted by the Credit Agreement, or (iv) enter into any agreement or undertaking restricting the right or ability of such Grantor or the Administrative Agent to sell, assign or transfer any of the Investment Property or Proceeds thereof, except, with respect to such Investment Property, shareholders' agreements entered into by such Grantor with respect to Persons in which such Grantor maintains an ownership interest of 50% or less.

(c) In the case of each Grantor which is an Issuer, such Issuer agrees that (i) it will be bound by the terms of this Agreement relating to the Investment Property issued by it and will comply with such terms insofar as such terms are applicable to it, (ii) it will notify the Administrative Agent promptly in writing of the occurrence of any of the events described in Section 5.7(a) with respect to the Investment Property issued by it and (iii) the terms of Sections 6.3(c) and 6.7 shall apply to it, mutatis mutandis, with respect to all actions that may be required of it pursuant to Section 6.3(c) or 6.7 with respect to the Investment Property issued by it.

5.8 Receivables. (a) Other than in the ordinary course of business consistent with its past practice and in amounts which are not material to such Grantor, such Grantor will not (i) grant any extension of the time of payment of any Receivable, (ii) compromise or settle any Receivable for less than the full amount thereof, (iii) release, wholly or partially, any Person liable for the payment of any Receivable, (iv) allow any credit or discount whatsoever on any Receivable or (v) amend, supplement or modify any Receivable in any manner that could adversely affect the value thereof.

(b) Such Grantor will deliver to the Administrative Agent a copy of each material demand, notice or document received by it that questions or calls into doubt the validity or enforceability of more than 5% of the aggregate amount of the then outstanding Receivables for all Grantors.

5.9 Intellectual Property. (a) Such Grantor (either itself or through licensees) will (i) continue to use each material Trademark on each and every trademark class of goods applicable to its current line as reflected in its current catalogs, brochures and price lists in order to maintain such Trademark in full force free from any claim of abandonment for non-use, (ii) maintain as in the past the quality of products and services offered under such Trademark, (iii) use such Trademark with the appropriate notice of registration and all other notices and legends required by applicable Requirements of Law, (iv) not adopt or use any mark which is confusingly similar or a colorable imitation of such Trademark unless the Administrative Agent, for the ratable benefit of the Lenders, shall obtain a perfected security interest in such mark pursuant to this Agreement, and (v) not (and not permit any licensee or sublicensee thereof to) do any act or knowingly omit to do any act whereby such Trademark may become invalidated or impaired in any way.

(b) Such Grantor (either itself or through licensees) will not do any act, or omit to do any act, whereby any material Patent may become forfeited, abandoned or dedicated to the public.

(c) Such Grantor (either itself or through licensees) (i) will employ each material Copyright and (ii) will not (and will not permit any licensee or sublicensee thereof to) do any act or knowingly omit to do any act whereby any material portion of the Copyrights may become invalidated or otherwise impaired. Such Grantor will not (either itself or through licensees) do any act whereby any material portion of the Copyrights may fall into the public domain.

(d) Such Grantor (either itself or through licensees) will not do any act that knowingly uses any material Intellectual Property to infringe the intellectual property rights of any other Person.

(e) Such Grantor will notify the Administrative Agent and the Lenders immediately if it knows, or has reason to know, that any application or registration relating to any material Intellectual Property may become forfeited, abandoned or dedicated to the public, or of any adverse determination or development (including, without limitation, the

institution of, or any such determination or development in, any proceeding in the United States Patent and Trademark Office, the United States Copyright Office or any court or tribunal in any country) regarding such Grantor's ownership of, or the validity of, any material Intellectual Property or such Grantor's right to register the same or to own and maintain the same.

(f) Whenever such Grantor, either by itself or through any agent, employee, licensee or designee, shall file an application for the registration of any Intellectual Property with the United States Patent and Trademark Office, the United States Copyright Office or any similar office or agency in any other country or any political subdivision thereof, such Grantor shall (i) to the extent such Intellectual Property is material, report such filing to the Administrative Agent concurrently with the next delivery of financial statements of the Borrower pursuant to Section 6.1(b) of the Credit Agreement and (ii) to the extent such Intellectual Property is not material, include all information with respect to such Intellectual Property in the report required to be delivered by the Borrower pursuant to Section 6.2(b)(iv). Upon request of the Administrative Agent, such Grantor shall execute and deliver, and have recorded, any and all agreements, instruments, documents, and papers as the Administrative Agent may request to evidence the Administrative Agent's and the Lenders' security interest in any Copyright, Patent or Trademark and the goodwill and general intangibles of such Grantor relating thereto or represented thereby.

(g) Such Grantor will take all reasonable and necessary steps, including, without limitation, in any proceeding before the United States Patent and Trademark Office, the United States Copyright Office or any similar office or agency in any other country or any political subdivision thereof, to maintain and pursue each application (and to obtain the relevant registration) and to maintain each registration of the material Intellectual Property, including, without limitation, filing of applications for renewal, affidavits of use and affidavits of incontestability.

(h) In the event that any material Intellectual Property is infringed, misappropriated or diluted by a third party, such Grantor shall (i) take such actions as such Grantor shall reasonably deem appropriate under the circumstances to protect such Intellectual Property and (ii) if such Intellectual Property is of material economic value, promptly notify the Administrative Agent after it learns thereof and, to the extent, in its reasonable judgment, such Grantor determines it appropriate under the circumstances, sue for infringement, misappropriation or dilution, to seek injunctive relief where appropriate and to recover any and all damages for such infringement, misappropriation or dilution.

5.10 Other Matters. If any Grantor shall cause to be delivered inventory or other property in excess of $25,000 in fair market value to any bailee after the Closing Date, such Grantor shall use reasonable efforts to cause such bailee to sign a bailee's subordination letter in substantially the form agreed to between the Borrower and the Administrative Agent. Such requirement may be waived at the option of the Administrative Agent. If any Grantor shall lease any real property or facilities in excess of $25,000 in fair market value after the Closing Date, such Grantor shall use reasonable efforts to cause the landlord in respect of

such leased property or facilities to sign a landlord waiver letter in substantially the form agreed to between the Borrower and the Administrative Agent. Such requirement may be waived at the option of the Administrative Agent.

SECTION 6. REMEDIAL PROVISIONS

6.1 Certain Matters Relating to Receivables. (a) At any time and from time to time after the occurrence and during the continuance of an Event of Default, the Administrative Agent shall have the right to make test verifications of the Receivables in any manner and through any medium that it reasonably considers advisable, and each Grantor shall furnish all such assistance and information as the Administrative Agent may require in connection with such test verifications. At any time and from time to time after the occurrence and during the continuance of an Event of Default, upon the Administrative Agent's request and at the expense of the relevant Grantor, such Grantor shall cause independent public accountants or others satisfactory to the Administrative Agent to furnish to the Administrative Agent reports showing reconciliations, aging and test verifications of, and trial balances for, the Receivables.

(b) The Administrative Agent hereby authorizes each Grantor to collect such Grantor's Receivables, and the Administrative Agent may curtail or terminate said authority at any time after the occurrence and during the continuance of an Event of Default. If required by the Administrative Agent at any time after the occurrence and during the continuance of an Event of Default, any payments of Receivables, when collected by any Grantor, (i) shall be forthwith (and, in any event, within two Business Days) deposited by such Grantor in the exact form received, duly indorsed by such Grantor to the Administrative Agent if required, in a Collateral Account maintained under the sole dominion and control of the Administrative Agent, subject to withdrawal by the Administrative Agent for the account of the Lenders only as provided in Section 6.5, and (ii) until so turned over, shall be held by such Grantor in trust for the Administrative Agent and the Lenders, segregated from other funds of such Grantor. Each such deposit of Proceeds of Receivables shall be accompanied by a report identifying in reasonable detail the nature and source of the payments included in the deposit.

(c) At any time and from time to time after the occurrence and during the continuance of an Event of Default, at the Administrative Agent's request, each Grantor shall deliver to the Administrative Agent all original and other documents evidencing, and relating to, the agreements and transactions which gave rise to the Receivables, including, without limitation, all original orders, invoices and shipping receipts.

6.2 Communications with Obligors; Grantors Remain Liable. (a) The Administrative Agent in its own name or in the name of others may at any time after the occurrence and during the continuance of an Event of Default communicate with obligors under the Receivables to verify with them to the Administrative Agent's satisfaction the existence, amount and terms of any Receivables.

(b) Upon the request of the Administrative Agent at any time after the occurrence and during the continuance of an Event of Default, each Grantor shall notify obligors on the Receivables that the Receivables have been assigned to the Administrative Agent for the ratable benefit of the Lenders and that payments in respect thereof shall be made directly to the Administrative Agent.

(c) Anything herein to the contrary notwithstanding, each Grantor shall remain liable under each of the Receivables to observe and perform all the conditions and obligations to be observed and performed by it thereunder, all in accordance with the terms of any agreement giving rise thereto. Neither the Administrative Agent nor any Lender shall have any obligation or liability under any Receivable (or any agreement giving rise thereto) by reason of or arising out of this Agreement or the receipt by the Administrative Agent or any Lender of any payment relating thereto, nor shall the Administrative Agent or any Lender be obligated in any manner to perform any of the obligations of any Grantor under or pursuant to any Receivable (or any agreement giving rise thereto), to make any payment, to make any inquiry as to the nature or the sufficiency of any payment received by it or as to the sufficiency of any performance by any party thereunder, to present or file any claim, to take any action to enforce any performance or to collect the payment of any amounts which may have been assigned to it or to which it may be entitled at any time or times.

6.3 Pledged Stock. (a) Unless an Event of Default shall have occurred and be continuing and the Administrative Agent shall have given notice to the relevant Grantor of the Administrative Agent's intent to exercise its corresponding rights pursuant to Section 6.3(b), each Grantor shall be permitted to receive all cash dividends paid in respect of the Pledged Stock and all payments made in respect of the Pledged Notes, to the extent permitted in the Credit Agreement, and to exercise all voting and corporate rights with respect to the Investment Property; provided, however, that no vote shall be cast or corporate right exercised or other action taken which, in the Administrative Agent's reasonable judgment, would impair the Collateral or which would be inconsistent with or result in any violation of any provision of the Credit Agreement, this Agreement or any other Loan Document.

(b) If an Event of Default shall occur and be continuing and the Administrative Agent shall give notice of its intent to exercise such rights to the relevant Grantor or Grantors, (i) the Administrative Agent shall have the right to receive any and all cash dividends, payments or other Proceeds paid in respect of the Investment Property and make application thereof to the Obligations in such order as the Administrative Agent may determine, and (ii) any or all of the Investment Property shall be registered in the name of the Administrative Agent or its nominee, and the Administrative Agent or its nominee may thereafter exercise (x) all voting, corporate and other rights pertaining to such Investment Property at any meeting of shareholders of the relevant Issuer or Issuers or otherwise and (y) any and all rights of conversion, exchange and subscription and any other rights, privileges or options pertaining to such Investment Property as if it were the absolute owner thereof (including, without limitation, the right to exchange at its discretion any and all of the Investment Property upon the merger, consolidation, reorganization, recapitalization or other fundamental change in the corporate structure of any Issuer, or upon the exercise by any

TRADEMARK
REEL: 1815 FRAME: 0719

Grantor or the Administrative Agent of any right, privilege or option pertaining to such Investment Property, and in connection therewith, the right to deposit and deliver any and all of the Investment Property with any committee, depositary, transfer agent, registrar or other designated agency upon such terms and conditions as the Administrative Agent may determine), all without liability except to account for property actually received by it, but the Administrative Agent shall have no duty to any Grantor to exercise any such right, privilege or option and shall not be responsible for any failure to do so or delay in so doing.

(c) Each Grantor hereby authorizes and instructs each Issuer of any Investment Property pledged by such Grantor hereunder to (i) comply with any instruction received by it from the Administrative Agent in writing that (x) states that an Event of Default has occurred and is continuing and (y) is otherwise in accordance with the terms of this Agreement, without any other or further instructions from such Grantor, and each Grantor agrees that each Issuer shall be fully protected in so complying, and (ii) unless otherwise expressly permitted hereby, pay any dividends or other payments with respect to the Investment Property directly to the Administrative Agent.

6.4 Proceeds to be Turned Over To Administrative Agent. In addition to the rights of the Administrative Agent and the Lenders specified in Section 6.1 with respect to payments of Receivables, if an Event of Default shall occur and be continuing, all Proceeds received by any Grantor consisting of cash, checks and other near-cash items shall be held by such Grantor in trust for the Administrative Agent and the Lenders, segregated from other funds of such Grantor, and shall, forthwith upon receipt by such Grantor, be turned over to the Administrative Agent in the exact form received by such Grantor (duly indorsed by such Grantor to the Administrative Agent, if required). All Proceeds received by the Administrative Agent hereunder shall be held by the Administrative Agent in a Collateral Account maintained under its sole dominion and control. All Proceeds while held by the Administrative Agent in a Collateral Account (or by such Grantor in trust for the Administrative Agent and the Lenders) shall continue to be held as collateral security for all the Obligations and shall not constitute payment thereof until applied as provided in Section 6.5.

6.5 Application of Proceeds. At such intervals as may be agreed upon by the Borrower and the Administrative Agent, or, if an Event of Default shall have occurred and be continuing, at any time at the Administrative Agent's election, the Administrative Agent may apply all or any part of Proceeds held in any Collateral Account in payment of the Obligations in such order as the Administrative Agent may elect, and any part of such funds which the Administrative Agent elects not so to apply and deems not required as collateral security for the Obligations shall be paid over from time to time by the Administrative Agent to the Borrower or to whomsoever may be lawfully entitled to receive the same. Any balance of such Proceeds remaining after the Obligations shall have been paid in full, no Letters of Credit shall be outstanding and the Commitments shall have terminated shall be paid over to the Borrower or to whomsoever may be lawfully entitled to receive the same.

6.6 Code and Other Remedies. If an Event of Default shall occur and be continuing, the Administrative Agent, on behalf of the Lenders, may exercise, in addition to all other rights and remedies granted to them in this Agreement and in any other instrument or agreement securing, evidencing or relating to the Obligations, all rights and remedies of a secured party under the New York UCC or any other applicable law. Without limiting the generality of the foregoing, the Administrative Agent, without demand of performance or other demand, presentment, protest, advertisement or notice of any kind (except any notice required by law referred to below) to or upon any Grantor or any other Person (all and each of which demands, defenses, advertisements and notices are hereby waived), may in such circumstances forthwith collect, receive, appropriate and realize upon the Collateral, or any part thereof, and/or may forthwith sell, lease, assign, give option or options to purchase, or otherwise dispose of and deliver the Collateral or any part thereof (or contract to do any of the foregoing), in one or more parcels at public or private sale or sales, at any exchange, broker's board or office of the Administrative Agent or any Lender or elsewhere upon such terms and conditions as it may deem advisable and at such prices as it may deem best, for cash or on credit or for future delivery without assumption of any credit risk. The Administrative Agent or any Lender shall have the right upon any such public sale or sales, and, to the extent permitted by law, upon any such private sale or sales, to purchase the whole or any part of the Collateral so sold, free of any right or equity of redemption in any Grantor, which right or equity is hereby waived and released. Each Grantor further agrees, at the Administrative Agent's request, to assemble the Collateral and make it available to the Administrative Agent at places which the Administrative Agent shall reasonably select, whether at such Grantor's premises or elsewhere. The Administrative Agent shall apply the net proceeds of any action taken by it pursuant to this Section 6.6, after deducting all reasonable costs and expenses of every kind incurred in connection therewith or incidental to the care or safekeeping of any of the Collateral or in any way relating to the Collateral or the rights of the Administrative Agent and the Lenders hereunder, including, without limitation, reasonable attorneys' fees and disbursements, to the payment in whole or in part of the Obligations, in such order as the Administrative Agent may elect, and only after such application and after the payment by the Administrative Agent of any other amount required by any provision of law, including, without limitation, Section 9-504(1)(c) of the New York UCC, need the Administrative Agent account for the surplus, if any, to any Grantor. To the extent permitted by applicable law, each Grantor waives all claims, damages and demands it may acquire against the Administrative Agent or any Lender arising out of the exercise by them of any rights hereunder. If any notice of a proposed sale or other disposition of Collateral shall be required by law, such notice shall be deemed reasonable and proper if given at least 10 days before such sale or other disposition.

6.7 Registration Rights. (a) If the Administrative Agent shall determine to exercise its right to sell any or all of the Pledged Stock pursuant to Section 6.6, and if in the opinion of the Administrative Agent it is necessary or advisable to have the Pledged Stock, or that portion thereof to be sold, registered under the provisions of the Securities Act, the relevant Grantor will cause the Issuer thereof to (i) execute and deliver, and cause the directors and officers of such Issuer to execute and deliver, all such instruments and documents, and do or cause to be done all such other acts as may be, in the opinion of the

TRADEMARK
REEL: 1815 FRAME: 0721

Administrative Agent, necessary or advisable to register the Pledged Stock, or that portion thereof to be sold, under the provisions of the Securities Act, (ii) use its best efforts to cause the registration statement relating thereto to become effective and to remain effective for a period of one year from the date of the first public offering of the Pledged Stock, or that portion thereof to be sold, and (iii) make all amendments thereto and/or to the related prospectus which, in the opinion of the Administrative Agent, are necessary or advisable, all in conformity with the requirements of the Securities Act and the rules and regulations of the Securities and Exchange Commission applicable thereto. Each Grantor agrees to cause such Issuer to comply with the provisions of the securities or "Blue Sky" laws of any and all jurisdictions which the Administrative Agent shall designate and to make available to its security holders, as soon as practicable, an earnings statement (which need not be audited) which will satisfy the provisions of Section 11(a) of the Securities Act.

(b) Each Grantor recognizes that the Administrative Agent may be unable to effect a public sale of any or all the Pledged Stock, by reason of certain prohibitions contained in the Securities Act and applicable state securities laws or otherwise, and may be compelled to resort to one or more private sales thereof to a restricted group of purchasers which will be obliged to agree, among other things, to acquire such securities for their own account for investment and not with a view to the distribution or resale thereof. Each Grantor acknowledges and agrees that any such private sale may result in prices and other terms less favorable than if such sale were a public sale and, notwithstanding such circumstances, agrees that any such private sale shall be deemed to have been made in a commercially reasonable manner. The Administrative Agent shall be under no obligation to delay a sale of any of the Pledged Stock for the period of time necessary to permit the Issuer thereof to register such securities for public sale under the Securities Act, or under applicable state securities laws, even if such Issuer would agree to do so.

(c) Each Grantor agrees to use its best efforts to do or cause to be done all such other acts as may be necessary to make such sale or sales of all or any portion of the Pledged Stock pursuant to this Section 6.7 valid and binding and in compliance with any and all other applicable Requirements of Law. Each Grantor further agrees that a breach of any of the covenants contained in this Section 6.7 will cause irreparable injury to the Administrative Agent and the Lenders, that the Administrative Agent and the Lenders have no adequate remedy at law in respect of such breach and, as a consequence, that each and every covenant contained in this Section 6.7 shall be specifically enforceable against such Grantor, and such Grantor hereby waives and agrees not to assert any defenses against an action for specific performance of such covenants except for a defense that no Event of Default has occurred under the Credit Agreement.

6.8 Waiver; Deficiency. Each Grantor waives and agrees not to assert any rights or privileges which it may acquire under Section 9-112 of the New York UCC. Each Grantor shall remain liable for any deficiency if the proceeds of any sale or other disposition of the Collateral are insufficient to pay its Obligations and the fees and disbursements of any attorneys employed by the Administrative Agent or any Lender to collect such deficiency.

SECTION 7. THE ADMINISTRATIVE AGENT

7.1 Administrative Agent's Appointment as Attorney-in-Fact, etc. (a) Each Grantor hereby irrevocably constitutes and appoints the Administrative Agent and any officer or agent thereof, with full power of substitution, as its true and lawful attorney-in-fact with full irrevocable power and authority in the place and stead of such Grantor and in the name of such Grantor or in its own name, for the purpose of carrying out the terms of this Agreement, to take any and all appropriate action and to execute any and all documents and instruments which may be necessary or desirable to accomplish the purposes of this Agreement, and, without limiting the generality of the foregoing, each Grantor hereby gives the Administrative Agent the power and right, on behalf of such Grantor, without notice to or assent by such Grantor, to do any or all of the following:

(i) in the name of such Grantor or its own name, or otherwise, take possession of and indorse and collect any checks, drafts, notes, acceptances or other instruments for the payment of moneys due under any Receivable or with respect to any other Collateral and file any claim or take any other action or proceeding in any court of law or equity or otherwise deemed appropriate by the Administrative Agent for the purpose of collecting any and all such moneys due under any Receivable or with respect to any other Collateral whenever payable;

(ii) in the case of any Intellectual Property, execute and deliver, and have recorded, any and all agreements, instruments, documents and papers as the Administrative Agent may request to evidence the Administrative Agent's and the Lenders' security interest in such Intellectual Property and the goodwill and general intangibles of such Grantor relating thereto or represented thereby;

(iii) pay or discharge taxes and Liens levied or placed on or threatened against the Collateral, effect any repairs or any insurance called for by the terms of this Agreement and pay all or any part of the premiums therefor and the costs thereof;

(iv) execute, in connection with any sale provided for in Section 6.6 or 6.7, any indorsements, assignments or other instruments of conveyance or transfer with respect to the Collateral; and

(v) (1) direct any party liable for any payment under any of the Collateral to make payment of any and all moneys due or to become due thereunder directly to the Administrative Agent or as the Administrative Agent shall direct; (2) ask or demand for, collect, and receive payment of and receipt for, any and all moneys, claims and other amounts due or to become due at any time in respect of or arising out of any Collateral; (3) sign and indorse any invoices, freight or express bills, bills of lading, storage or warehouse receipts, drafts against debtors, assignments, verifications, notices and other documents in connection with any of the Collateral; (4) commence and prosecute any suits, actions or proceedings at law or in equity in any court of competent jurisdiction to collect the Collateral or any portion thereof and to enforce

TRADEMARK
REEL: 1815 FRAME: 0723

any other right in respect of any Collateral; (5) defend any suit, action or proceeding brought against such Grantor with respect to any Collateral; (6) settle, compromise or adjust any such suit, action or proceeding and, in connection therewith, give such discharges or releases as the Administrative Agent may deem appropriate; (7) assign any Copyright, Patent or Trademark (along with the goodwill of the business to which any such Copyright, Patent or Trademark pertains), throughout the world for such term or terms, on such conditions, and in such manner, as the Administrative Agent shall in its sole discretion determine; and (8) generally, sell, transfer, pledge and make any agreement with respect to or otherwise deal with any of the Collateral as fully and completely as though the Administrative Agent were the absolute owner thereof for all purposes, and do, at the Administrative Agent's option and such Grantor's expense, at any time, or from time to time, all acts and things which the Administrative Agent deems necessary to protect, preserve or realize upon the Collateral and the Administrative Agent's and the Lenders' security interests therein and to effect the intent of this Agreement, all as fully and effectively as such Grantor might do.

Anything in this Section 7.1(a) to the contrary notwithstanding, the Administrative Agent agrees that it will not exercise any rights under the power of attorney provided for in this Section 7.1(a) unless an Event of Default shall have occurred and be continuing.

(b) If any Grantor fails to perform or comply with any of its agreements contained herein, the Administrative Agent, at its option, but without any obligation so to do, may perform or comply, or otherwise cause performance or compliance, with such agreement.

(c) The expenses of the Administrative Agent incurred in connection with actions undertaken as provided in this Section 7.1, together with interest thereon at a rate per annum equal to the highest rate per annum at which interest would then be payable on any category of past due ABR Loans under the Credit Agreement, from the date of payment by the Administrative Agent to the date reimbursed by the relevant Grantor, shall be payable by such Grantor to the Administrative Agent on demand.

(d) Each Grantor hereby ratifies all that said attorneys shall lawfully do or cause to be done by virtue hereof. All powers, authorizations and agencies contained in this Agreement are coupled with an interest and are irrevocable until this Agreement is terminated and the security interests created hereby are released.

7.2 Duty of Administrative Agent. The Administrative Agent's sole duty with respect to the custody, safekeeping and physical preservation of the Collateral in its possession, under Section 9-207 of the New York UCC or otherwise, shall be to deal with it in the same manner as the Administrative Agent deals with similar property for its own account. Neither the Administrative Agent, any Lender nor any of their respective officers, directors, employees or agents shall be liable for failure to demand, collect or realize upon any of the Collateral or for any delay in doing so or shall be under any obligation to sell or otherwise dispose of any Collateral upon the request of any Grantor or any other Person or to take any other action whatsoever with regard to the Collateral or any part thereof. The

powers conferred on the Administrative Agent and the Lenders hereunder are solely to protect the Administrative Agent's and the Lenders' interests in the Collateral and shall not impose any duty upon the Administrative Agent or any Lender to exercise any such powers. The Administrative Agent and the Lenders shall be accountable only for amounts that they actually receive as a result of the exercise of such powers, and neither they nor any of their officers, directors, employees or agents shall be responsible to any Grantor for any act or failure to act hereunder, except for their own gross negligence or willful misconduct.

7.3 Execution of Financing Statements. Pursuant to Section 9-402 of the New York UCC and any other applicable law, each Grantor authorizes the Administrative Agent to file or record financing statements and other filing or recording documents or instruments with respect to the Collateral without the signature of such Grantor in such form and in such offices as the Administrative Agent determines appropriate to perfect the security interests of the Administrative Agent under this Agreement. A photographic or other reproduction of this Agreement shall be sufficient as a financing statement or other filing or recording document or instrument for filing or recording in any jurisdiction.

7.4 Authority of Administrative Agent. Each Grantor acknowledges that the rights and responsibilities of the Administrative Agent under this Agreement with respect to any action taken by the Administrative Agent or the exercise or non-exercise by the Administrative Agent of any option, voting right, request, judgment or other right or remedy provided for herein or resulting or arising out of this Agreement shall, as between the Administrative Agent and the Lenders, be governed by the Credit Agreement and by such other agreements with respect thereto as may exist from time to time among them, but, as between the Administrative Agent and the Grantors, the Administrative Agent shall be conclusively presumed to be acting as agent for the Lenders with full and valid authority so to act or refrain from acting, and no Grantor shall be under any obligation, or entitlement, to make any inquiry respecting such authority.

SECTION 8. MISCELLANEOUS

8.1 Amendments in Writing. None of the terms or provisions of this Agreement may be waived, amended, supplemented or otherwise modified except in accordance with subsection 10.1 of the Credit Agreement.

8.2 Notices. All notices, requests and demands to or upon the Administrative Agent or any Grantor hereunder shall be effected in the manner provided for in subsection 10.2 of the Credit Agreement; provided that any such notice, request or demand to or upon any Guarantor shall be addressed to such Guarantor at its notice address set forth on Schedule 1.

8.3 No Waiver by Course of Conduct; Cumulative Remedies. Neither the Administrative Agent nor any Lender shall by any act (except by a written instrument pursuant to Section 8.1), delay, indulgence, omission or otherwise be deemed to have waived

any right or remedy hereunder or to have acquiesced in any Default or Event of Default. No failure to exercise, nor any delay in exercising, on the part of the Administrative Agent or any Lender, any right, power or privilege hereunder shall operate as a waiver thereof. No single or partial exercise of any right, power or privilege hereunder shall preclude any other or further exercise thereof or the exercise of any other right, power or privilege. A waiver by the Administrative Agent or any Lender of any right or remedy hereunder on any one occasion shall not be construed as a bar to any right or remedy which the Administrative Agent or such Lender would otherwise have on any future occasion. The rights and remedies herein provided are cumulative, may be exercised singly or concurrently and are not exclusive of any other rights or remedies provided by law.

8.4 Enforcement Expenses; Indemnification. (a) Each Guarantor agrees to pay or reimburse each Lender and the Administrative Agent for all its costs and expenses incurred in collecting against such Guarantor under the guarantee contained in Section 2 or otherwise enforcing or preserving any rights under this Agreement and the other Loan Documents to which such Guarantor is a party, including, without limitation, the fees and disbursements of counsel (including the allocated fees and expenses of in-house counsel) to each Lender and of counsel to the Administrative Agent.

(b) Each Guarantor agrees to pay, and to save the Administrative Agent and the Lenders harmless from, any and all liabilities with respect to, or resulting from any delay in paying, any and all stamp, excise, sales or other taxes which may be payable or determined to be payable with respect to any of the Collateral or in connection with any of the transactions contemplated by this Agreement, in each case to the extent the Borrower would be required to do so pursuant to subsection 10.5 of the Credit Agreement.

(c) Each Guarantor agrees to pay, and to save the Administrative Agent and the Lenders harmless from, any and all liabilities, obligations, losses, damages, penalties, actions, judgments, suits, costs, expenses or disbursements of any kind or nature whatsoever with respect to the execution, delivery, enforcement, performance and administration of this Agreement to the extent the Borrower would be required to do so pursuant to subsection 10.5 of the Credit Agreement.

(d) The agreements in this Section 8.4 shall survive repayment of the Obligations and all other amounts payable under the Credit Agreement and the other Loan Documents.

8.5 Successors and Assigns. This Agreement shall be binding upon the successors and assigns of each Grantor and shall inure to the benefit of the Administrative Agent and the Lenders and their successors and assigns; provided that no Grantor may assign, transfer or delegate any of its rights or obligations under this Agreement without the prior written consent of the Administrative Agent.

8.6 Set-Off. Each Grantor hereby irrevocably authorizes the Administrative Agent and each Lender at any time and from time to time, without notice to such Grantor or

any other Grantor, any such notice being expressly waived by each Grantor, to, while an Event of Default has occurred and is continuing, set-off and appropriate and apply any and all deposits (general or special, time or demand, provisional or final), in any currency, and any other credits, indebtedness or claims, in any currency, in each case whether direct or indirect, absolute or contingent, matured or unmatured, at any time held or owing by the Administrative Agent or such Lender to or for the credit or the account of such Grantor, or any part thereof in such amounts as the Administrative Agent or such Lender may elect, against and on account of the obligations and liabilities of such Grantor to the Administrative Agent or such Lender hereunder and claims of every nature and description of the Administrative Agent or such Lender against such Grantor, in each case, then due and payable (whether at the stated maturity, by acceleration or otherwise) in any currency, whether arising hereunder, under the Credit Agreement, any other Loan Document or otherwise, as the Administrative Agent or such Lender may elect, whether or not the Administrative Agent or any Lender has made any demand for payment and although such obligations, liabilities and claims may be contingent or unmatured. The Administrative Agent and each Lender shall notify such Grantor promptly of any such set-off and the application made by the Administrative Agent or such Lender of the proceeds thereof, provided that the failure to give such notice shall not affect the validity of such set-off and application. The rights of the Administrative Agent and each Lender under this Section 8.6 are in addition to other rights and remedies (including, without limitation, other rights of set-off) which the Administrative Agent or such Lender may have.

8.7 Counterparts. This Agreement may be executed by one or more of the parties to this Agreement on any number of separate counterparts (including by telecopy), and all of said counterparts taken together shall be deemed to constitute one and the same instrument.

8.8 Severability. Any provision of this Agreement which is prohibited or unenforceable in any jurisdiction shall, as to such jurisdiction, be ineffective to the extent of such prohibition or unenforceability without invalidating the remaining provisions hereof, and any such prohibition or unenforceability in any jurisdiction shall not invalidate or render unenforceable such provision in any other jurisdiction.

8.9 Section Headings. The Section headings used in this Agreement are for convenience of reference only and are not to affect the construction hereof or be taken into consideration in the interpretation hereof.

8.10 Integration. This Agreement and the other Loan Documents represent the agreement of the Grantors, the Administrative Agent and the Lenders with respect to the subject matter hereof and thereof, and there are no promises, undertakings, representations or warranties by the Administrative Agent or any Lender relative to subject matter hereof and thereof not expressly set forth or referred to herein or in the other Loan Documents.

8.11 GOVERNING LAW. THIS AGREEMENT SHALL BE GOVERNED BY, AND CONSTRUED AND INTERPRETED IN ACCORDANCE WITH, THE LAW OF THE STATE OF NEW YORK.

8.12 Submission To Jurisdiction; Waivers. Each Grantor hereby irrevocably and unconditionally:

(a) submits for itself and its property in any legal action or proceeding relating to this Agreement and the other Loan Documents to which it is a party, or for recognition and enforcement of any judgment in respect thereof, to the non-exclusive general jurisdiction of the Courts of the State of New York, the courts of the United States of America for the Southern District of New York, and appellate courts from any thereof;

(b) consents that any such action or proceeding may be brought in such courts and waives any objection that it may now or hereafter have to the venue of any such action or proceeding in any such court or that such action or proceeding was brought in an inconvenient court and agrees not to plead or claim the same;

(c) agrees that service of process in any such action or proceeding may be effected by mailing a copy thereof by registered or certified mail (or any substantially similar form of mail), postage prepaid, to such Grantor at its address referred to in Section 8.2 or at such other address of which the Administrative Agent shall have been notified pursuant thereto;

(d) agrees that nothing herein shall affect the right to effect service of process in any other manner permitted by law or shall limit the right to sue in any other jurisdiction; and

(e) waives, to the maximum extent not prohibited by law, any right it may have to claim or recover in any legal action or proceeding referred to in this Section any special, exemplary, punitive or consequential damages.

8.13 Acknowledgements. Each Grantor hereby acknowledges that:

(a) it has been advised by counsel in the negotiation, execution and delivery of this Agreement and the other Loan Documents to which it is a party;

(b) neither the Administrative Agent nor any Lender has any fiduciary relationship with or duty to any Grantor arising out of or in connection with this Agreement or any of the other Loan Documents, and the relationship between the Grantors, on the one hand, and the Administrative Agent and Lenders, on the other hand, in connection herewith or therewith is solely that of debtor and creditor; and

(c) no joint venture is created hereby or by the other Loan Documents or otherwise exists by virtue of the transactions contemplated hereby among the Lenders or among the Grantors and the Lenders.

8.14 Additional Grantors. Each Subsidiary of the Borrower that is required to become a party to this Agreement pursuant to subsection 6.09 of the Credit Agreement shall become a Grantor for all purposes of this Agreement upon execution and delivery by such Subsidiary of an Assumption Agreement in the form of Annex 1 hereto.

8.15 Releases. (a) At such time as the Loans, the Reimbursement Obligations and the other Obligations shall have been paid in full, the Commitments have been terminated and no Letters of Credit shall be outstanding, the Collateral shall be released from the Liens created hereby, and this Agreement and all obligations (other than those expressly stated to survive such termination) of the Administrative Agent and each Grantor hereunder shall terminate, all without delivery of any instrument or performance of any act by any party, and all rights to the Collateral shall revert to the Grantors. At the request and sole expense of any Grantor following any such termination, the Administrative Agent shall deliver to such Grantor any Collateral held by the Administrative Agent hereunder, and execute and deliver to such Grantor such documents as such Grantor shall reasonably request to evidence such termination.

(b) If any of the Collateral shall be sold, transferred or otherwise disposed of by any Grantor in a transaction permitted by the Credit Agreement, then the Administrative Agent, at the request and sole expense of such Grantor, shall execute and deliver to such Grantor all releases or other documents reasonably necessary or desirable for the release of the Liens created hereby on such Collateral. At the request and sole expense of the Borrower, a Subsidiary Guarantor shall be released from its obligations hereunder in the event that all the Capital Stock of such Subsidiary Guarantor shall be sold, transferred or otherwise disposed of in a transaction permitted by the Credit Agreement; provided that the Borrower shall have delivered to the Administrative Agent, reasonable notice prior to the date of the proposed release, a written request for release identifying the relevant Subsidiary Guarantor and the terms of the sale or other disposition in reasonable detail, including the price thereof and any expenses in connection therewith, together with a certification by the Borrower stating that such transaction is in compliance with the Credit Agreement and the other Loan Documents.

8.16 WAIVER OF JURY TRIAL. EACH GRANTOR HEREBY IRREVOCABLY AND UNCONDITIONALLY WAIVES TRIAL BY JURY IN ANY LEGAL ACTION OR PROCEEDING RELATING TO THIS AGREEMENT OR ANY OTHER LOAN DOCUMENT AND FOR ANY COUNTERCLAIM THEREIN.

IN WITNESS WHEREOF, each of the undersigned has caused this Amended and Restated Guarantee and Collateral Agreement to be duly executed and delivered as of the date first above written.

HOME PRODUCTS INTERNATIONAL, INC.

By: _____
Title: Executive Vice President, Chief Financial Officer and Secretary

SELFIX, INC.

By: _____
Title: Executive Vice President, Chief Financial Officer and Secretary

TAMOR CORPORATION

By: _____
Title: Vice President, Treasurer and Clerk

SEYMOUR HOUSEWARES CORPORATION

By: _____
Title: Senior Vice President, Chief Financial Officer and Secretary

SHUTTERS, INC.

By: _____
Title: Vice President, Treasurer and Secretary

PRESTIGE PLASTICS, INC.

By: _____
Title: Vice President, Treasurer and Secretary

509265\0577\02778\987VGSMU.SCA

SCHEDULE 1
to
GUARANTEE AND COLLATERAL AGREEMENT

Notice Addresses of Guarantors

Selfix, Inc.
4501 West 47th Street
Chicago, IL 60632
Attn.: James Winslow

Seymour Housewares Corporation
c/o Home Products International, Inc.
4501 West 47th Street
Chicago, IL 60632
Attn.: James Winslow

Shutters, Inc.
c/o Home Products International, Inc.
4501 West 47th Street
Chicago, IL 60632
Attn.: James Winslow

Tamor Corporation
c/o Home Products International, Inc.
4501 West 47th Street
Chicago, IL 60632
Attn.: James Winslow

Prestige Plastics,Inc.
c/o Home Products International, Inc.
4501 West 47th Street
Chicago, Illinois 60632
Attn: James Winslow

TRADEMARK
REEL: 1815 FRAME: 0731

SCHEDULE 2
to
GUARANTEE AND COLLATERAL AGREEMENT

Description of Investment Property

Pledged Stock:

Issuer	Class of Stock	Stock Certificate Number	No. of Shares
Tamor Corporation	Common	100	38.771
Shutters, Inc.	Common	2	1,000
Selfix, Inc.	Common	1	1,000
Seymour Housewares Corporation	Common	2	1,000
Prestige Plastics, Inc.	Common	1	1,000
Seymour S.A. de C.V.	[to come]		

TRADEMARK
REEL: 1815 FRAME: 0732

SCHEDULE 3
to
GUARANTEE AND COLLATERAL AGREEMENT

Filings and Other Actions Required to Perfect Security Interests

Uniform Commercial Code Filings

Home Products International Inc. **4501 West 47th Street** **Chicago, IL 60632**	**Selfix, Inc.** **4501 West 47th Street** **Chicago, IL 60632**	**Shutters, Inc.** **P.O. Box 407** **12213 Highway 173** **Hebron, IL 60034**	**Seymour Housewares Corporation** **885 North Chestnut Street** **Seymour, IN 47274**	**Tamor Corporation** **106 Carter Street** **P.O. Box 359** **Leominster, MA 01453**
[all filing locations of Subsidiaries, except Anoka County, Minnesota]	Illinois Secretary of State Cook County, Illinois (Real Estate Records)	Illinois Secretary of State McHenry County, Illinois (Real Estate Records)	Secretary of State of Indiana Jackson County, Indiana (Real Estate Records)	Illinois Secretary of State Secretary of the Commonwealth of Massachusetts
			Secretary of State of North Carolina	Secretary of the Commonwealth of Massachusetts
			Iredell County, North Carolina	Town Clerk Leominster, Massachusetts
			Anson County, North Carolina	Worcester County (N.D.), Massachusetts (Real Estate Records)
			City of Richmond, Virginia	Pike County, Missouri
			State Corporations Commission, Virginia	Pike County, Missouri (Real Estate Records)
			Secretary of State of Texas	
			Secretary of State of South Carolina	
			Hidalgo County, Texas	
			Jefferson County, Kentucky	
			Aken County, South Carolina	
			Lancaster County, South Carolina	
			Forsythe County, North Carolina	

1359090.03

Prestige Plastics, Inc.
9534 NW Foley Blvd.
Coon Rapids, MN
55433

Secretary of State of Minnesota

Anoka County, Minnesota (Real Estate Records)

Secretary of State of California

Riverside County, California

Secretary of State of Illinois

1359090.03

SCHEDULE 3
to
GUARANTEE AND COLLATERAL AGREEMENT

Filings and Other Actions Required to Perfect Security Interests

Patent and Trademark Filings

[Simpson Thacher to provide]

1359090.03

SCHEDULE 3
to
GUARANTEE AND COLLATERAL AGREEMENT

Filings and Other Actions Required to Perfect Security Interests

Actions with Respect to Pledged Stock

[Simpson Thacher to provide]

1359090.03

SCHEDULE 3
to
GUARANTEE AND COLLATERAL AGREEMENT

Filings and Other Actions Required to Perfect Security Interests

Other Actions

[Simpson Thacher to provide]

1359090.03

SCHEDULE 4
to
GUARANTEE AND COLLATERAL AGREEMENT

Location of Jurisdiction of Organization and Chief Executive Office

	Grantor; Chief Executive Office	Jurisdiction of Organization
1.	Home Products International, Inc. 4501 West 47th Street Chicago, Illinois 60632	Delaware
2.	Selfix, Inc. 4501 West 47th Street Chicago, Illinois 60632	Delaware
3.	Seymour Housewares Corporation 855 North Chestnut Street Seymour, IN 47274	Delaware
4.	Shutters, Inc. 12213 Highway 173 Hebron, IL 60034	Illinois
5.	Tamor Corporation 106 Carter Street Leominster, MA 01453	Massachusetts
6.	Prestige Plastics, Inc. 9534 NW Foley Boulevard Coon Rapids, MN 55433	Minnesota

1359090.03

SCHEDULE 5
to
GUARANTEE AND COLLATERAL AGREEMENT

Location of Inventory and Equipment

Grantor		Locations
Home Products International, Inc.	(a)	2400 Arthur Avenue Elk Grove Village, IL 60007
	(b)	2701 South Busse Road Elk Grove Village, IL 60007
Prestige Plastics, Inc.	(a)	9534 NW Foley Blvd. Coon Rapids, MN 55433
	(b)	900 Apollo Road Eagan, MN
	(c)	2795 Highway 55 Eagan, MN
	(d)	224 Ryan Avenue St. Paul, MN 55102
	(e)	c/o Triways, Inc. 3401 Etiwanda Avenue Mira Loma, CA 91752
Selfix, Inc.	(a)	4501 West 47th Street Chicago, IL 60632
	(b)	5455 South Archer Ave. Chicago, IL 60633

Shutters, Inc.		12213 Highway 173 Hebron, IL 60034
Tamor Corporation	(a)	106 Carter Street Leominister, MA 01453
	(b)	323 Industrial Blvd. Thomasville, GA 31792
	(c)	3016 West Georgia Street Louisiana, MO
	(d)	634 Crawford Street Fitchburg, MA
	(e)	20 Mohawk Drive Leominster, MA 01453
	(f)	200 Hamilton Street Leominster, MA 01453
	(g)	2400 Arthur Avenue Elk Grove Village, IL 60007
	(h)	2701 South Busse Road Elk Grove Village, IL 60007
	(i)	c/o Acorn Plastics, Inc. 625 A South Rail Road Street Montgomery, IL 60538
	(j)	c/o Eagle Plastics, Inc. 1530 Commerce Street Stow, OH 44224
	(k)	c/o K&C Plastics, Inc. 18 Crawford Street Leominster, MA 01453

TRADEMARK
REEL: 1815 FRAME: 0740

Seymour Housewares Corporation

(a) 885 North Chestnut
Seymour, IN 47274
(West Plant, Administrative)

(b) 201 N. Jackson Park Dr.
Seymour, IN 47274
(East Plant)

(c) 400 S. Airport Rd.
Seymour, IN 47274
(South Plant)

(d) 500 Brookwood Street
Mooresville, NC 28115

(e) 1531 West Tipton
Seymour, IN 47274
(Skaggs Facility)

(f) 5.33 acres located at
S. Airport Rd.
Seymour, IN
(Logistics Center)

(g) Bay 7, Air Cargo Facility Building
2201 Uvalde
McAllen, TX 78503

(h) 2400 Arthur Avenue
Elk Grove Village, IL 60007

(i) 2701 South Busse Road
Elk Grove Village, IL 60007

TRADEMARK
REEL: 1815 FRAME: 0741

(j) c/o Development Services, Inc.
1820 1st Avenue
Freeman Field
Seymour, IN 47274

(k) c/o Gateway Manufacturing, Inc.
124 Apperson Heights Drive
Mt. Sterling, KY 40353

(l) c/o Wade Manufacturing, Inc.
Highway 74 East
Wadesboro, NC 28170

(m) c/o Waverly Textiles Processing
8401 Ft. Darling Road
Richmond, VA 23237

(n) c/o Kuntry Kottage
102 S. Co. Road 1300 E.
Seymour, IN 47274

TRADEMARK
REEL: 1815 FRAME: 0742

SCHEDULE 6
to
GUARANTEE AND COLLATERAL AGREEMENT

Intellectual Property

[See Attached]

[To come]

1359090.03

PATENTS AND TRADEMARKS

Patents and Trademarks Owned by Seymour

See Attached

PCMASTER REPORTER

SEYMOUR HOUSEWARES CORPORATION

ESTIMATE OF COSTS AND LISTINGS OF ISSUED PATENTS
AS OF OCTOBER 13, 1997

ISSUED PATENTS:

DOCKET NO./COUNTRY TITLE		PATENT NO./ ISSUED DATE	ACTION DUE EST. OF COST
858-001 DOOR MOUNTED IRONING BOARD ASSEMBLY	USA	4899667 13FE1990	--
858-001 DOOR MOUNTED IRONING BOARD ASSEMBLY	CANA	1330292 21JE1994	--
858-001 DOOR MOUNTED IRONING BOARD ASSEMBLY	JAPA	2688767 29AU1997	--
858-001 DOOR MOUNTED IRONING BOARD ASSEMBLY	MEXI	163135 30AU1991	--
858-001 CONT. DOOR MOUNTED IRONING BOARD ASSEMBLY	USA	4976205 11DE1990	--
858-001 CONT.II DOOR MOUNTED IRONING BOARD ASSEMBLY	USA	5040468 20AU1991	--
858-006 IRONING BOARD	USA	4821650 18AP1989	--
858-008 ADJUSTABLE IRONING TABLE COVER	USA	4982316 08JA1991	--
858-009RE IRONING BOARD	USA	33918 12MY1992	--
858-013 MESH TOP IRONING BOARD WITH STEPPED PERIPHERY	USA	5272825 28DE1993	--
858-013DIV	USA	5335432 [illegible]	1st Maint. Fee - Feb. 9, 1998

PCMASTER REPORTER

SENT BY:SEYMOUR ;11-13-97 ; 19:38 ; PURCHASING SEYMOUR- 212-455-2502;# 1/14

SEYMOUR HOUSEWARES CORPORATION

ESTIMATE OF COSTS AND LISTINGS OF ISSUED PATENTS
AS OF OCTOBER 13, 1997

ISSUED PATENTS:

DOCKET NO./COUNTRY TITLE	PATENT NO./ ISSUED DATE	ACTION DUE EST. OF COST
858-014 CONT. USA CHILDREN'S EXPANDABLE GATE WITH SAFETY FEATURES TO PREVENT	4669521 02JE1987	--
858-015 USA IRONING BOARD	4759296 26JL1988	--
858-015 DIV. I CANA IRONING BOARD	1324883 07DE1993	Annuity - Dec. 1997 $236.08
858-015 DIV. II CANA IRONING BOARD	1333686 27DE1994	Annuity - Dec. 1997 $236.08
858-015 DIV. IV CANA IRONING BOARD	1333881 10JA1995	Annuity - Jan. 1998 $236.08
858-015 DIV.III CANA IRONING BOARD	1333880 10JA1995	Annuity - Jan. 1998 $236.08
858-018 USA DOOR MOUNTED IRONING BOARD ASSEMBLY WITH RETRACTABLE HOLDERS	5483761 16JA1996	--
858-022 USA IRONING BOARD COVER COATING WIHT SOLE IRON SOLE LUBRICANT	4920669 01MY1990	2nd Maint. Fee - Nov. 1, 1997 PAID
858-022 ASTL NON-STAINING LUBRICATION OF LAUNDRY IRON	640359 11JA1990	Annuity - Jan. 1998 $451.10
858-022 MEXI NON-STAINING LUBRICATION OF LAUNDRY IRON	167335 17MR1993	Annuity - Jan. 1998 $768.00
858-022 DIV USA NON-STAINING LUBRICATION OF LAUNDRY IRON SOLES	5164244 17NO1992	--

PCMASTER REPORTER

SEYMOUR HOUSEWARES CORPORATION

ESTIMATE OF COSTS AND LISTINGS OF ISSUED PATENTS
AS OF OCTOBER 13, 1997

ISSUED PATENTS:

DOCKET NO./COUNTRY TITLE		PATENT NO./ ISSUED DATE	ACTION DUE EST. OF COST
858-023D STAND FOR ELECTRIC PRESSING IRON COMBINED WITH CORD RETAINER	USA	DES311,618 23OC1990	--
858-025 IRONING BOARD COVER WITH TENSIONED FRONT POCKET & PERIPHERY	USA	5231777 03AU1993	--
858-025 IRONING BOARD COVER WITH TENSIONED FRONT POCKET & PERIPHERY	CANA	2085554 14JA1997	Annuity - Dec. 1997 $346.51
858-025 IRONING BOARD COVER WITH TENSIONED FRONT POCKET & PERIPHERY	MEXI	182147 17JL1996	--
858-026 PEARLESCENT IRONING BOARD COVER	USA	5259131 09NO1993	--
858-027 PAD & SHEET TACKING IN IRONING BOARD COVER	USA	5371961 13DE1994	1st Maint. Fee - June 13, 1998 $1345.00
858-029 RECEPTACLE CONSTRUCTION FOR SUPPORTING A COLLAPSIBLE BAG	USA	5544781 13AU1996	--
858-030D COMBINED CARRY-OUT HAMPER BAG & SUPPORT FOR SAME	USA	D290538 23JE1987	--
858-032D PORTABLE PRESSING BOARD	USA	D291613 25AU1987	--
858-034 COLLAPSIBLE LAUNDRY HAMPER ASSEMBLY WITH LATCHING	USA	5667066 16SE1997	--
858-035 [illegible] IRONING BOARD	USA	4970968 20NO1990	2nd Maint. Fee _ May 20, 1998 $2395.00

PCMASTER REPORTER

SEYMOUR HOUSEWARES CORPORATION

ESTIMATE OF COSTS AND LISTINGS OF ISSUED PATENTS
AS OF OCTOBER 13, 1997

ISSUED PATENTS:

DOCKET NO./COUNTRY TITLE	PATENT NO./ ISSUED DATE	ACTION DUE EST. OF COST
858-037 USA DOOR MOUNTED IRONING BOARD	5329860 19JL1994	1st Maint. Fee - Jan. 10, 1998 $1345.00
858-037 MEXI DOOR MOUNTED IRONING BOARD	179549 18AE1995	--

SEYMOUR HOUSEWARES CORPORATION
ISSUED TRADEMARKS
AS OF OCTOBER 13, 1997

ISSUED TRADEMARKS:

DOCKET NO./COUNTRY TITLE		REG. NO/ ISSUE DATE	ACTION DUE EST. OF COST
858-042T* STABLE TABLE	USA	1,704,252 July 28, 1992	Sec. 8 & 15 Due 7-28-98
858-043T** PERKY	USA	655,229 Dec. 3, 1957	Renewal Due 12-3-97

* We also need to prepare an assignment from Magla to Seymour Housewares Corp. From what we have in our files, this was not done with the original purchase group. Also, a Power of Attorney will need to be prepared.

Estimated Cost - $500.00 (including Sec. 8 & 15)

** We have checked the original assignment from Magla to Seymour Housewares and this trademark was listed. Greenebaum, Doll & McDonald may have already contacted you regarding this renewal since it was on the list, even though they did not have the file.

Estimated Cost - $450.00

ENT BY:SEYMOUR :11-13-97 : 19:39 : PURCHASING SEYMOUR- 212-455-2502-QA:# 4/14

6

TRADEMARK
REEL: 1815 FRAME: 0749

MASTER FILE REPORT PCMASTER REPORTER
PAGE: 1

SEYMOUR HOUSEWARES CORPORATION

ESTIMATE OF COSTS AND LISTINGS OF PENDING PATENTS
AS OF OCTOBER 13, 1997

PENDING PATENTS:

DOCKET NO./COUNTRY TITLE	SERIAL NO./ FILING DATE	ACTION DUE EST. OF COST
858-013 CANA MESH TOP IRONING BOARD WITH ATTACHMENTS	2100112 08JL1993	--
858-022 CANA NON-STAINING LUBRICATION OF LAUNDRY IRON	2007492 10JA1990	Annuity - Jan. 1988 $446.51
858-022 DIV. MEXI A LUBRICATING DEVICE FOR A LAUNDRY IRON	92-6998 04DE1992	--
858-027 CANA PAD & SHEET TACKING IN IRONING BOARD COVER	2132821 23SE1994	--
858-027 MEXI PAD & SHEET TACKING IN IRONING BOARD COVER	947502 29SE1994	--

63

Marks Ownwed By: Seymour Housewares Corp.

MARK	REGISTRATION NUMBER	STATUS	DATE REGISTERED	DATE
WELMAID (stylized)	230521	Registered	07/26/27	7/26/20
LADY SEYMOUR (design)	655028	Registered	11/26/57	11/26/9
PORTA-GATE	652951	Registered	10/15/57	
SORTA-CART	686612	Registered	10/13/59	10/13/9
LAUNDRO NET (design)	768940	Registered	05/05/64	5/5/2004
TOUCHUP	860505	Registered	11/19/68	11/19/20
WORLDSBEST	1107171	Registered	11/28/78	11/28/98
COMPAC-TABLE	1146430	Registered	01/27/81	1/27/200
KEEPSAFE	1468329	Registered	12/08/87	12/08/20
READY PRESS	1547440	Registered	07/11/89	7/11/99
READY PRESS FOLDAWAY (design)	1546473	Registered	07/04/89	7/4/99
EXPRESS	1607502	Registered	07/24/90	
SEYMOUR JUVENILE (design)	1649505	Registered	07/02/91	7/2/2007
SEYMOUR HOUSEWARES (design)	1734640	Registered	11/24/92	11/24/98
GUARDMASTER	1673485	Registered	01/28/92	1/28/98
ULTRA FIT	1690224	Registered	06/02/92	6/2/98
ELASTICORD	1690225	Registered	06/02/92	6/2/98
ASYGLIDE	1777909	Registered	06/22/93	6/22/99

Marks Ownwed By: Seymour Housewares Corporation

MARK	REGISTRATION NUMBER	STATUS	DATE REGISTERED	DATE
WE HELP YOU LOOK YOUR BEST	1759932	Registered	03/23/93	3/23/99
EASYBOARD	1729420	Registered	11/03/92	11/3/98
WORKWIZARD	1729421	Registered	11/03/92	11/3/98
SUREFOOT	1727687	Registered	10/27/92	10/27/98
STAINGUARD	1751321	Registered	2/9/93	2/9/99
SEYMOUR LOGO	1813613	Registered	2/28/93	2/28/98
SEWING HELPER	1867666	Registered	12/13/94	12/13/20
SPIDER	1363409	Registered	10/1/85	10/1/200
STRIPES	1476871	Registered	2/16/88	2/16/200
SILVER SEAL	388,320	Registered	6/17/41	6/17/200
PERKY	655,229	Registered	12/3/57	12/3/97
COLOR MATE	691,644	Registered	1/19/60	1/19/200
PRINCESS	752,930	Registered	7/16/63	7/16/200
MOZAIC	771,851	Registered	6/23/64	6/23/200
OLIUM	1,187,725	Registered	1/26/82	1/26/200
ERMALON	1395733	Registered	6/3/86	6/3/2006
TRETCH & FIT	1405010	Registered	8/12/86	8/12/200
RYSTAL GARD	1507217	Registered	10/4/88	10/4/200

65

Marks Ownwed By: Seymour Housewares Corporation

MARK	REGISTRATION NUMBER	STATUS	DATE REGISTERED	DATE
IRON GLIDE	1569803	Registered	12/5/89	12/5/99
FASHION-COTE	1101531	Registered	9/5/78	9/5/98
BIG FOOT	1,991,617	Registered	8/6/96	8/6/200
TRAVELPRESS	2,019,770	Registered	11/26/96	11/26/2
HEAT SAFE	2,050,046	Registered	4/1/97	4/1/200
SNUGFIT	2,058,476	Registered	4/29/97	4/29/200
REVERSIFIT	2074244	Registered	6/24/97	6/24/200

6

Marks Owned By: Seymour Housewares Corp.

MARK	COUNTRY	STATUS	DATE REGISTERED	REGISTRATION NUMBER	NEXT ACTION	
WELMAID (stylized)	Canada	Cancelled				
COMPAC-TABLE	Canada	Registered	Oct 8, 1981	283,785	Renewal	10/30/98
SEYMOUR JUVENILE (design)	Canada	Registered	Mar 18, 1994	TMA425,176	Renewal	3/18/2004
SEYMOUR HOUSEWARES (design)	Canada	Abandoned				
ULTRA FIT	Canada	Registered	Nov 18, 1994	435522	Renewal	11/18/2009
ELASTICORD	Canada	Registered	Jan 28, 1994	422574	Section 45	1/28/97
EASYGLIDE	Canada	Registered	Jun 17, 1994	428933	Renewal	6/15/2009
WE HELP YOU LOOK YOUR BEST	Canada	Registered		436165	Renewal	9/16/2009
EASYBOARD	Canada	Registered	Apr 15, 1994	TMA 428,676	Renewal	4/15/2009
WORKWIZARD	Canada	Registered	Apr 15, 1994	TMA 428,223	Renewal	4/15/2009
SUREFOOT	Canada	Registered	Apr 15, 1994	TMA 428,222	Renewal	4/15/2009
UNDIES	Canada	SOLD	Jul 21, 1989	358585	SOLD to	
QUICK TWIST	Canada	SOLD	Jun 4, 1982	288748	Sold to	
OT	Canada	SOLD	Jun 4, 1982	289745	SOLD to	
BEAUTI-GLIDE	Switzerland	SOLD	Jun 18, 1974	271,738	SOLD to	
ULTRA FIT	Benelux	Registered	Sep 4, 1992	520 872	Renewal	9/4/2002
WE HELP YOU LOOK YOUR BEST	Benelux	Registered	Sep 4, 1993	520 176	Renewal	9/3/2002
STAINGUARD	Benelux	Registered	Sep 4, 1993	521 988	Renewal	9/4/2002

67

Marks Owned By: Seymour Housewares Corporation

MARK	COUNTRY	STATUS	DATE REGISTERED	REGISTRATION NUMBER	NEXT ACTION	
SUREFOOT	Benelux	Registered	Sep 4, 1993	520 176	Renewal	9/4/2002
EASYGLIDE	Benelux	Registered	Sep 4, 1993	520 177	Renewal	9/4/2002
WORKWIZARD	Benelux	Registered	Sep 4, 1993	520 178	Renewal	9/4/2002
EASYBOARD	Benelux	Registered	Sep 4, 1992	521 601	Renewal	9/4/2002
SEYMOUR LOGO	Benelux	Registered	Apr 9, 1992	522 583	Renewal	4/9/2002
ULTRA FIT	Great Britain	Registered	Sep 4, 1992	1511300	Renewal	9/4/99
STAINGUARD	Great Britain	Registered	Jun 11, 1993	1511567	Renewal	6/11/2000
SUREFOOT	Great Britain	Registered	May 13, 1992	1511568	Renewal	5/13/99
WORKWIZARD	Great Britain	Registered	May 28, 1993	1511394	Renewal	5/28/2000
Seymour LOGO	Great Britain	Pending			Hatted	
BEAUTI-GLIDE	Great Britain	SOLD	Jul 6, 1974	B1030834	SOLD to	
WORKWIZARD	France	Registered	Mar 19, 1993	92/432,731	Renewal	4/19/2003
WE HELP YOU LOOK YOUR BEST	France	Registered	Apr 9, 1992	92/432,734	Renewal	4/9/2002
XPRESS	France	Registered	Jan 23, 1990	1,671,638	Renewal	1/23/2000
SEYMOUR LOGO	France	Pending	Sep 9, 1992	92433014	Renewal	9/9/2002
SUREFOOT	France	Registered	Mar 19, 1993	92/432,733	Renewal	3/19/2003
EASYBOARD	France	Registered	Mar 19, 1993	92/432,730	Renewal	3/19/2003
ULTRAFIT	France	Registered	Oct 2, 1992	92/435,882	Renewal	10/2/2002

Marks Owned By: Seymour Housewares Corporation

MARK	COUNTRY	STATUS	DATE REGISTERED	REGISTRATION NUMBER	NEXT ACTION	
EXPRESS	Benelux	Registered	Jan 19, 1990	472 405	Renewal	1/19/2000
WE HELP YOU LOOK YOUR BEST	Mexico	Registered	Sep 4, 1992	428974	Renewal	9/4/2002
WORKWIZARD	Mexico	Registered	Sep 4, 1992	428973	Renewal	9/4/2002
SEYMOUR and DESIGN	Mexico	Registered	Jul 8, 1991	408,471	Renewal	11/3/2000
SUREFOOT	Mexico	Registered	Sep 4, 1992	428972	Renewal	9/4/2002
SEYMOUR THE CLOTHES LINE	Mexico	Registered	Oct 11, 1991	400837	Renewal	11/3/2000
SEYMOUR JUVENILE	Mexico	Registered	Jul 8, 1991	387569	Renewal	11/3/200
ELASTICORD	Mexico	Pending				9/4/2002
ULTRA FIT	Mexico	Registered	May 2, 1994	458837	Renewal	4/27/2002
EASYBOARD	Mexico	Pending				
EASYGLIDE	Mexico	Registered	Feb 8, 1994	458385	Renewal	9/4/2002
STAINGUARD	Mexico	Registered	Sep 4, 1992	400862	Renewal	11/16/2002
SEYMOUR LOGO	Mexico	Pending				
ULTRAFIT	Germany	Registered	Jul 18, 1994	2071727	Renewal	9/4/2002
EASYBOARD	Germany	Registered	Oct 8, 1994		Renewal	9/4/2002
SEYMOUR LOGO	Germany	Registered	May 27, 1994	2059022	Renewal	9/4/2002
STAINGUARD	Germany	Abandoned			Abandoned	
WORKWIZARD	Germany	Pending				

Marks Owned By: Seymour Housewares Corporation

MARK	COUNTRY	STATUS	DATE REGISTERED	REGISTRATION NUMBER	NEXT ACTION	
EASYGLIDE	Germany	Registered	Oct 6, 1994		Renewal	9/4/2002
SUREFOOT	Germany	Abandoned				
WE HELP YOU LOOK YOUR BEST	Germany	Pending				
SEYMOUR LOGO	Canada	Pending			Registration	
STAINGUARD	Canada	Registered		TMA432,83	Renewal	8/26/2000
EASYBOARD	Great Britian	Pending			Application on	
EASYGLIDE	Great Britian	Registered	Jun 3, 1994	1511367	Renewal	3/5/99
WE HELP YOU LOOK YOUR BEST	Mexico	Registered	Sep 4, 1992	468306	Renewal	9/4/2002
BIG FOOT	Canada	Pending				
BIG FOOT	Canada	Pending				
SPIDER AND DESIGN	Canada	Registered	Mar 18, 1988	330,247	Renewal	3/18/98
SPIDER	Canada	Registered	Aug 8, 1988	326,839	Renewal	8/8/98
SPIDER (copyright)	Canada	Registered	Jul 12, 1988	351,290	Renewal	7/12/98
STRIPES	Canada	Registered	Mar 4, 1988	337,784	Renewal	3/4/98
EXPRESS	Mexico	Registered	Jan 2, 1996	368,895	Renewal	1/2/2005

Patents and Trademarks Owned by Selfix

See Attached

/ix Granted and Pending Patent Files by Country, Then Patent Number

:: 1 * Date: 04 DEC 1997

ıtry.....	App No.....	App Date.....	Pat No.....	D.O.G.....	Title.....	Status.....
trelia	313795	OCT 03 1995			Under Vanity Organizer Design (2130)	Pending
:relia	015288	JAN 15 1988	101872	NOV 03 1988	Plate Rack (2322)	Granted
trelia	026089	FEB 02 1989	105384	OCT 16 1989	Towel Bar (3212/3218/3224)	Granted
trelia	026189	FEB 02 1989	105385	OCT 16 1989	Tissue Holder with Roller (3209/3298)	Granted
trelia	026289	FEB 02 1989	105386	OCT 16 1989	Soap Dish (3202/21)	Granted
trelia	026389	FEB 02 1989	105387	OCT 16 1989	Tissue Holder with Arm (3208)	Granted
trelia	026489	FEB 02 1989	105388	OCT 10 1989	Toothbrush Tumbler Holder (3207)	Granted
.trelia	026589	FEB 02 1989	105389	OCT 16 1989	Hook (3201)	Granted
strelia	026689	FEB 02 1989	105390	OCT 16 1989	Towel Ring (3206)	Granted
strelia	026789	FEB 02 1989	105391	OCT 16 1989	Double Hook (3210)	Granted
strelia	218388	JUN 29 1988	105754	OCT 30 1989	Bathroom Frame Fixture (1002/7)	Granted
strelia	218588	JUN 29 1988	106076	NOV 28 1989	Double Hook (1010)	Granted
strelia	314293	SEP 30 1993	120270	MAY 09 1996	Closet Extender	Granted
strelia	25896	JAN 31 1996	127614	AUG 13 1996	Faucet Connector (443)	Granted
strelia	14196	JAN 18 1996	127654	AUG 26 1996	Mirror With Hooks (2291)	Granted
ıstrelia	28896	FEB 05 1996	127735	SEP 03 1996	Shower Caddy (2191)	Granted
ıstrelia	28996	FEB 05 1996	127736	SEP 03 1996	Arcuate Shower Caddy (2173)	Granted

TRADEMARK
REEL: 1815 FRAME: 0759

Selfix Granted and Pending Patent Files by Country, Then Patent Number
Page: 2
Date: 04 DEC 1997

Country.....	App No.....	App Date.....	Pat No.....	D.O.G.....	Title.....	Status.....
Australia	29096	FEB 05 1996	127737	SEP 03 1996	Shower Caddy (2193)	Granted
Australia	351695	NOV 03 1995	127844	SEP 06 1996	Shower Caddy Design (2151/2153)	Granted
Australia	255696	AUG 02 1996	129646	APR 18 1997	Shower Caddy Design (2151/2153)	Granted
Australia	1134283	FEB 11 1983	552646	NOV 13 1986	Hangable Stackable Basket (2360)	Granted
ustralia	172682	SEP 30 1982	88657	APR 26 1984	A Rack (#2301 - Caddy)	Granted
stralia	289783	FEB 15 1983	88696	APR 26 1984	Hangable Stackable Basket	Granted
tralia	172582	SEP 30 1982	88829	MAY 17 1984	A Plate Rack (2321)	Granted
ralia	423883	JUN 29 1983	89040	JUN 14 1984	(Three Arm Rack) Support Rack - #2341	Granted
alia	172682	SEP 30 1982	89196	JUL 12 1984	A Bath Tub Tray (2331)	Granted
lia	646384	SEP 30 1982	90869	AUG 21 1985	A Rack (Kitchen Organizer)	Granted
ia	646484	SEP 30 1982	90850	AUG 29 1985	A Rack (#2303 - Mini Organizer)	Granted
a	456286	MAR 21 1986	95536	MAR 12 1987	Shower Shelf (2252)	Granted
	19960095	JAN 17 1996			Tackboard With Key Hooks (595)	Pending
	19960216	JAN 31 1996			Faucet Connector (443)	Pending
	2148062	APR 27 1995			Resilient Clip (Santape)	Pending
	2153563	JUL 10 1995			Fastenerless Modular Shutter	Pending
	2153564	JUL 10 1995			Modular Shutter And Retention	Pending

fix Granted and Pending Patent Files by Country, Then Patent Number
e: 3 Date: 04 DEC 1997

ntry.....	App No.....	App Date.....	Pat No.....	D.O.G.....	Title.....	Status.....
					Assembly	
ada	374717	APR 06 1981	1149787	JUL 12 1983	Skirt and Trouser Clip for Hanger	Granted
ada	423470	APR 06 1981	1155428	OCT 18 1983	Skirt and Trouser Clip for Hanger	Granted
ada	382460	JUL 24 1981	1157429	NOV 22 1983	Shower Shelf (2251/53)	Granted
ada	393232	DEC 24 1981	1160029	JUN 12 1984	Stackable Shelf Unit (02313 - Lock-Loge Stacking Shelf)	Granted
ada	422554	FEB 28 1983	1201906	MAR 18 1986	Hangable Stackable Basket (2360)	Granted
ada	446797	OCT 31 1984	1215690	DEC 23 1986	Skirt and Trouser Clip for Hanger	Granted
ada	490354	SEP 10 1985	1221645	MAY 12 1987	Molded Shower Shelf (2551)	Granted
ada	459226	JUL 19 1984	1228062	OCT 13 1987	Fixture Mounting Arrangement (DURACHROME Backplate)	Granted
ada	514313	JUL 21 1986	1255633	JUN 13 1989	Modular Wrap Organizer (2329)	Granted
ada	517012	AUG 28 1986	1260877	SEP 26 1989	Sliding Rack (2323)	Granted
ada	1203872	MAR 12 1987	59217	AUG 25 1987	Corner Shelf (2278)	Granted
ada	2303872	MAR 23 1987	59369	SEP 22 1987	Shelf (2275)	Granted
ada	1801881	JAN 18 1988	62230	JAN 03 1989	Plate Rack (2322)	Granted
ada	27018922	JAN 27 1989	64424	SEP 27 1989	Toothbrush Tumbler Holder (3207)	Granted
ada	30018910	JAN 30 1989	64426	SEP 27 1989	Towel Bar (3212/3218/3224)	Granted

TRADEMARK
REEL: 1815 FRAME: 0761

fix Granted and Pending Patent Files by Country, Then Patent Number

ge: 4 Date: 04 DEC 1997

ntry.....	App No.....	App Date.....	Pat No.....	D.O.G.....	Title.....	Status.....
nada	30018913	JAN 30 1989	64427	SEP 27 1989	Double Hook (3210)	Granted
nada	30018914	JAN 30 1989	64428	SEP 27 1989	Hook (3201)	Granted
nada	30018915	JAN 30 1989	64429	SEP 27 1989	Soap Dish (3202/21)	Granted
nada	3001899	JAN 30 1989	64678	OCT 31 1989	Tissue Holder with Roller (3209/3298)	Granted
nada	30018911	JAN 30 1989	64679	OCT 31 1989	Towel Ring (3206)	Granted
nada	30018912	JAN 30 1989	64765	NOV 21 1989	Tissue Holder with Arm (3208)	Granted
nada	0906896	JUN 09 1989	65002	DEC 27 1989	Wall Mountable Caddy (2356)	Granted
nada	0906897	JUN 09 1989	65003	DEC 27 1989	Appliance and Accessories Organizer (2355)	Granted
nada	0204939	SEP 30 1993	73590	DEC 09 1993	Closet Extender	Granted
nada	19941703	SEP 01 1994	76484	JUN 01 1995	Hair Dryer Hook(Design)	Granted
nada	19952205	SEP 29 1995	78243	APR 11 1996	Under Vanity Organizer Design (2130)	Granted
nada	19952206	SEP 29 1995	78244	APR 11 1996	Shower Caddy Extender (2152)	Granted
nada	19952207	SEP 29 1995	78245	APR 11 1996	Over Door Towel Rack (2170)	Granted
nada	19952476	NOV 03 1995	78786	JUL 26 1996	Shower Caddy Design (2151/2153)	Granted
nada	19960130	JAN 22 1996	79076	SEP 13 1996	Organizer (588)	Granted
nada	19960131	JAN 22 1996	79107	SEP 20 1996	Mirror With Hooks (2291)	Granted
nada	19960200	JAN 30 1996	79177	OCT 06 1996	Shelf With Hooks (770)	Granted

ix Granted and Pending Patent Files by Country, Then Patent Number

: 5 Date: 04 DEC 1997

try.....	App No.....	App Date.....	Pat No.....	D.O.G.....	Title.....	Status.....
ia	19960277	FEB 08 1996	80267	MAR 21 1997	Arcuate Shower Caddy (2173)	Granted
ia	19960276	FEB 08 1996	80637	MAY 02 1997	Shower Caddy (2193)	Granted
a	94100175	JAN 08 1994			Modular Cube Storage System (Tidy Kids II)	Pending
pean	831111562	APR 03 1981	0113000	JUL 19 1969	Skirt and Trouser Clip for Hanger	Granted
ce	934950	SEP 28 1993			Closet Extender	Pending
ce	9505394	MAY 05 1995	2719459	JAN 17 1997	Resilient Clip (Santapa)	Granted
many	195170040	MAY 09 1995			Resilient Clip (Santapa)	Pending
many	63485	MAY 20 1985	24463	AUG 22 1985	Soap Dish (4261)	Granted
many	63585	MAY 20 1985	24464	AUG 22 1985	Towel Bar (4272)	Granted
many	63685	MAY 20 1985	24465	AUG 22 1985	Tissue Holder (4298)	Granted
many	63785	MAY 20 1985	24466	AUG 22 1985	Hook Fixture (4210)	Granted
many	63885	MAY 20 1985	24467	AUG 22 1985	Bath Fixture (4205/6/8)	Granted
many	63985	MAY 20 1985	24468	AUG 22 1985	Tumbler Holder (4267)	Granted
many	64085	MAY 20 1985	24469	AUG 22 1985	Shower Shelf (2551)	Granted
many	16586	FEB 07 1986	25495	MAR 26 1986	Wrap Organizer (2329)	Granted
many	16686	FEB 07 1986	25496	MAR 26 1986	Double Spice Rack (2302)	Granted
many	16786	FEB 07 1986	25497	MAR 26 1986	Large Lid Organizer (2318)	Granted
many	16886	FEB 07 1986	25498	MAR 26 1986	Sliding Rack (2323)	Granted

ifix Granted and Pending Patent Files by Country, Then Patent Number

ge: 6 . Date: 04 DEC 1997

ntry.....	App No.....	App Date.....	Pat No.....	D.O.G.....	Title.....	Status.....
many	16986	FEB 07 1986	25499	MAR 26 1986	Bag Organizer (2328)	Granted
many	17086	FEB 07 1986	25500	MAR 26 1986	Storage Basket (2362)	Granted
rmany	24586	FEB 26 1986	25548	MAR 26 1986	Shower Shelf	Granted
rmany	24686	FEB 26 1986	25549	FEB 26 1986	Shower Shelf (2252)	Granted
rmany	39286	MAR 25 1986	25691	APR 26 1986	Caddy	Granted
rmany	39386	MAR 25 1986	25692	APR 26 1986	Spice Rack (2301)	Granted
rmany	95070052	AUG 31 1995	95070052	MAY 31 1996	Chain And Link Member	Granted
rmany	95081429	OCT 02 1995	95081429	JUL 17 1996	Under Vanity Organizer Design (2130)	Granted
eat Britain	2051566	OCT 30 1995			Shower Caddy Design (2151/2153)	Pending
eat Britain	95093829	MAY 09 1995			Resilient Clip (Santapa)	Pending
eat Britain		MAR 31 1982	1005926	MAR 31 1982	Kitchen Caddy (2305)	Granted
eat Britain	1005927	MAR 31 1982	1005927	MAR 31 1982	Spice Rack (2301)	Granted
eat Britain	1005928	MAR 31 1982	1005928	MAR 31 1982	A Rack (2303)	Granted
eat Britain	1005929	MAR 31 1982	1005929	MAR 31 1982	Plate Rack (2321)	Granted
eat Britain	1005931	MAR 31 1982	1005931	MAR 31 1982	Bath Tub Tray (2331)	Granted
eat Britain		SEP 06 1982	1008590		Two Prong Hook Rack	Granted
eat Britain		JUL 11 1982	1008591		Four Prong Hook Rack	Granted
eat Britain		JAN 28 1983	1011128		Hangable Stackable Basket	Granted

TRADEMARK
REEL: 1815 FRAME: 0764

elfin Granted and Pending Patent Files by Country, Then Patent Number

ege: 7 Date: 04 DEC 1997

untry.....	App No.....	App Date.....	Pat No.....	D.O.G.....	Title.....	Status.....
eat Britain	1013743	JUN 23 1983	1013743	SEP 06 1983	Three Arm Rack (2341)	Granted
eat Britain		JUL 08 1983	1014004		Wire Sink Drainer	Granted
eat Britain		JUL 08 1983	1014005		Utility Hook	Granted
eat Britain		JUL 08 1983	1014006		U-Hook	Granted
reat Britain	1027130	JUN 03 1985	1027130	DEC 23 1985	Soap Dish (4261)	Granted
reat Britain	1027131	JUN 03 1985	1027131	DEC 23 1985	Towel Bar (4272)	Granted
eat Britain	1027132	JUN 03 1985	1027132	DEC 23 1985	Hook Fixture (4210)	Granted
eat Britain	1027133	JUN 03 1985	1027133	DEC 23 1985	Bath Fixture (4205/6/8)	Granted
eat Britain	1027134	JUN 03 1985	1027134	DEC 23 1985	Tumbler Holder (4267)	Granted
eat Britain	1027135	JUN 03 1985	1027135	DEC 23 1985	Shower Shelf (2551)	Granted
eat Britain	1027136	JUN 03 1985	1027136	DEC 23 1985	Bath Fixture (4205/6/8)	Granted
eat Britain	1027137	JUN 03 1985	1027137	DEC 23 1985	Bath Fixture (4205/6/8)	Granted
eat Britain	1027138	JUN 03 1985	1027138	DEC 23 1985	Tissue Holder (4290)	Granted
eat Britain	1032972	MAR 20 1986	1032972	SEP 16 1986	Bathroom Shelf (2252)	Granted
eat Britain	1032973	MAR 20 1986	1032973	SEP 23 1986	Bathroom Shelf (2252)	Granted
eat Britain	1057100	FEB 13 1989	1057100	SEP 05 1989	Double Hook (3210)	Granted
eat Britain	1057101	FEB 13 1989	1057101	JAN 08 1990	Towel Bar (3212/3218/3224)	Granted
eat Britain	1057102	FEB 13 1989	1057102	NOV 10 1989	A Clothes Hook (3201)	Granted
eat Britain	1057103	FEB 13 1989	1057103	JUN 21 1990	Soap Dish (3202/21)	Granted

fix Granted and Pending Patent Files by Country, Then Patent Number

ie: 8 Date: 04 DEC 1997

ntry.....	App No.....	App Date.....	Pat No.....	D.O.G.....	Title.....	Status.....
at Britain	1057104	FEB 13 1989	1057104	JAN 08 1990	Tissue Holder With Arm (3208)	Granted
at Britain	1057106	FEB 13 1989	1057106	JUN 21 1990	Towel Ring (3206)	Granted
at Britain	1057107	FEB 13 1989	1057107	SEP 05 1989	Tissue Holder With Roller (3209/3298)	Granted
at Britain	1057108	FEB 13 1989	1057108	JUN 21 1990	Toothbrush Tumbler Holder	Granted
at Britain	1057109	FEB 13 1989	1057109	JUN 21 1990	Soap Dish (3202/21)	Granted
at Britain	1060096	JUN 12 1989	1060096	DEC 19 1989	A Rack For Appliance and Accessories (2355)	Granted
eat Britain	1060097	JUN 12 1989	1060097	DEC 19 1989	A Wall Mounted Rack (2356)	Granted
at Britain	2033681	SEP 09 1993	2033681	DEC 23 1993	Closet Extender (7425)	Granted
at Britain	2041809	SEP 13 1994	2041809	JAN 16 1995	Hair Dryer Hook(Design)	Granted
at Britain	2050114	SEP 04 1995	2050114	JAN 30 1996	Chain And Link Member	Granted
eat Britain	2050820	SEP 29 1995	2050820	FEB 08 1996	Over Door Towel Rack (2170)	Granted
eat Britain	2050821	SEP 29 1995	2050821	FEB 08 1996	Under Vanity Organizer Design (2130)	Granted
eat Britain	2053663	JAN 25 1996	2053663	MAY 01 1996	Faucet Connector (443)	Granted
ng Kong	12633		31689	APR 13 1989	Molded Shower Shelf (2551)	Granted
ng Kong	13667	NOV 04 1987	35592	NOV 04 1987	Stowable Shelf/Rack Assembly (2333)	Granted
pan	56694	JAN 07 1994			Modular Cube Storage System (Tidy Kids II)	Pending

lfix Granted and Pending Patent Files by Country, Then Patent Number

ge: 9 Date: 04 DEC 1997

untry.....	App No.....	App Date.....	Pat No.....	D.O.G.....	Title.....	Status.....
pan	6239952	OCT 04 1994			Modular Assembly and Components Therefor	Pending
pan	7110874	MAY 09 1995			Resilient Clip (Santapa)	Pending
pan	725863	SEP 01 1995			Chain And Link Member	Pending
pan	375801900	SEP 11 1980	620652	DEC 15 1983	Spring Clip	Granted
xico	9502094	MAY 08 1995			Resilient Clip	Pending
xico	950943	SEP 29 1995			Under Vanity Organizer Design (2130)	Pending
xico	950945	SEP 29 1995			Over Door Towel Rack (2170)	Pending
xico	951110	NOV 03 1995			Shower Caddy Design (2153)	Pending
xico	96038	JAN 24 1996			Mirror With Hooks (2291)	Pending
xico	96045	JAN 31 1996			Faucet Connector (443)	Pending
xico	96058	FEB 08 1996			Arcuate Shower Caddy (2173)	Pending
xico	96059	FEB 08 1996			Shelf With Hooks (770)	Pending
xico	96060	FEB 08 1996			Shower Caddy (2193)	Pending
xico	96061	FEB 08 1996			Shower Caddy (2191)	Pending
CT	US81/00436	APR 03 1981			Skirt and Trouser Clip for Hanger	Pending
CT	US92/09681	NOV 09 1992			Molded Plastic Load-Bearing Support Device	Pending
CT	US94/11191	SEP 30 1994			Encapsulated Adhesive System for A Load-Bearing Support	Pending

TRADEMARK
REEL: 1815 FRAME: 0767

fix Granted and Pending Patent Files by Country, Then Patent Number

e: 10 Date: 04 DEC 1997

ntry.....	App No.....	App Date.....	Pat No.....	D.O.G.....	Title.....	Status.....
					Device	
an	74305058	OCT 09 1985	12641	SEP 01 1986	Sliding Rack (2323)	Granted
an	7730009301	MAY 02 1989	142122	SEP 11 1990	Double Hook (1010)	Granted
ted States	08/414,428	MAR 31 1995			Fastenerless Modular Shutter	Pending
ted States	08/585,490	JAN 16 1996			Fastenerless Modular Shutter with Adjustable Panel Support Member	Pending
ted States	08/825,274	MAR 27 1997			Fastenerless Modular Shutter	Pending
ted States	29/064,337	DEC 30 1996			Family Mesh Shower Caddy (2167)	Pending
ted States	29/064,338	DEC 30 1996			Mesh Shower Caddy (2164)	Pending
ted States	29/064,458	DEC 31 1996			Dino Hook Rack (7387)	Pending
ted States	29/066,491	FEB 14 1997			Hippo Hook Rack (7389)	Pending
ted States	29/066,492	FEB 14 1997			Baseball Hook (7379)	Pending
ted States	29/066,493	FEB 14 1997			Giraffe Hook (7385)	Pending
ted States	587,343	MAR 08 1984	32,269	OCT 28 1986	Plastic Clip	Granted
ted States	020,150	MAR 13 1979	4,251,946	FEB 24 1981	Adjustable Height Shutter (Foltman)	Granted
ted States	06/137,930	APR 07 1980	4,335,838	JUN 22 1982	Skirt and Trouser Clip for Hanger	Granted
ted States	318,888	NOV 06 1981	4,382,531	MAY 10 1983	Hanger with Swivel Hook and Skirt and Trouser Clips	Granted

TRADEMARK
REEL: 1815 FRAME: 0768

ix Granted and Pending Patent Files by Country, Then Patent Number

: 11 Date: 04 DEC 1997

try.....	App No.....	App.Date.....	Pat No.....	D.O.G.....	Title.....	Status.....
ed States	246,727	MAR 23 1981	4,387,811	JUN 14 1983	Shower Shelf (2251/53)	Granted
ed States	299,319	SEP 04 1981	4,444,320	APR 24 1984	Stackable Shelf Unit (#2313 - Lock-Legs Stacking Shelf)	Granted
ed States	407,113	AUG 13 1982	4,456,125	JUN 26 1984	Hangable Stackable Basket (2340)	Granted
ed States	425,863	SEP 28 1982	4,466,787	AUG 21 1984	Apparatus and Method for Forming Support Device	Granted
ed States	691,644	JAN 15 1985	4,573,591	MAR 04 1986	Molded Shower Shelf (2551)	Granted
ed States	611,592	MAY 22 1984	4,585,199	APR 29 1986	Fixture Mounting Arrangement (DURACHROME Backplate)	Granted
ted States	789,744	OCT 21 1985	4,666,201	MAY 19 1987	Modular Wrap Organizer (2329)	Granted
ted States	788,943	OCT 18 1985	4,673,089	JUN 16 1987	Sliding Rack (2323)	Granted
ted States	022,672	MAR 06 1987	4,712,692	DEC 15 1987	Stumble Shelf/Rack Assembly (2333)	Granted
ted States	573,989	JAN 26 1984	4,765,495	AUG 23 1988	Knock Down Storage System and Accessories Therefor	Granted
ted States	297,556	JAN 13 1989	4,893,770	JAN 16 1990	Appliance and Accessories Organizer (2355)	Granted
ted States	07/841,229	FEB 21 1992	5,152,116	OCT 06 1992	Modulpr Shutter Assembly (Dura-Glide)	Granted
ted States	07/661,897	FEB 27 1991	5,163,260	NOV 17 1992	Multi-Panel Modular Shutter Assembly	Granted
ted States	07/895,348	JUN 08 1992	5,241,728	SEP 07 1993	Resilient Clip (Hunter)	Granted
ted States	07/966,896	OCT 26 1992	5,265,391	NOV 30 1993	Stabilized Modular Shutter	Granted

TRADEMARK
REEL: 1815 FRAME: 0769

lfin Granted and Pending Patent Files by Country, Then Patent Number
ge: 12 Date: 04 DEC 1997

ntry.....	App No.....	App Date.....	Pat No.....	D.O.G.....	Title.....	Status.....
ited States	08/074,200	JUN 10 1993	5,323,993	JUN 28 1994	Molded Plastic Load-Bearing Support Device	Granted
ted States	08/131,779	OCT 04 1993	5,400,719	MAR 28 1995	Modular Assembly and Components Therefor	Granted
ted States	08/239,734	MAY 09 1994	5,402,558	APR 04 1995	Resilient Clip	Granted
ted States	08/304,372	SEP 12 1994	5,524,407	JUN 11 1996	Modular Shutter And Retention Assembly (New Track)	Granted
ited States	08/504,560	JUL 20 1995	5,620,105	APR 15 1997	Storage Design (2153)	Granted
ted States	06/335,112	DEC 28 1981	D-269,238	JUN 07 1983	Hanger	Granted
ted States	90/002,392		D-269,238			Granted
ted States	06/478,400	MAR 24 1983	D-281,204	NOV 05 1985	Anti-Theft Hanger Ring	Granted
ted States	478,400	MAR 24 1983	D-281,204	NOV 05 1985	Anti-Theft Hanger Ring	Granted
ted States	682,292	DEC 17 1984	D-281,575	DEC 03 1985	Hanger Bracket and Hook Therefor	Granted
ted States	463,343	FEB 07 1983	D-282,705	FEB 25 1986	Wall Mounted Rack (2341)	Granted
ted States	551,208	NOV 14 1983	D-283,786	MAY 13 1986	327 U - Hook	Granted
ted States	551,207	NOV 14 1983	D-283,787	MAY 13 1986	Utility Hook (# 329 - "Ladders 'N Things")	Granted
ed States	611,593	MAY 22 1984	D-285,156	AUG 19 1986	Wall Mounted Rack (2372)	Granted
ed States	689,082	JAN 04 1985	D-291,518	AUG 25 1987	Tissue Holder (4298)	Granted
ed States	689,085	JAN 04 1985	D-291,519	AUG 25 1987	Combined Tumbler and Toothbrush Holder (4267)	Granted

lfix Granted and Pending Patent Files by Country, Then Patent Number
ge: 13 Date: 04 DEC 1997

ntry.....	App No.....	App Date.....	Pat No.....	D.O.G.....	Title.....	Status.....
ted States	689,083	JAN 04 1985	D-291,630	SEP 01 1987	Hook Fixture (4210)	Granted
ted States	689,080	JAN 04 1985	D-291,638	SEP 01 1987	Soap Dish (4261)	Granted
ted States	689,081	JAN 04 1985	D-291,639	SEP 01 1987	Towel Bar (4272)	Granted
ited States	766,182	AUG 16 1985	D-291,755	SEP 08 1987	Spice Rack (2302)	Granted
ited States	766,183	AUG 16 1985	D-291,756	SEP 08 1987	Paper Bag Organizer (2328)	Granted
ited States	690,890	JAN 14 1985	D-292,256	OCT 13 1987	Shower Caddy (2551)	Granted
ited States	689,084	JAN 04 1985	D-293,184	DEC 15 1987	Towel Holder (4205/6/8)	Granted
ited States	766,714	AUG 19 1985	D-295,125	APR 12 1988	Lid Rack (2318)	Granted
ited States	766,715	AUG 19 1985	D-295,126	APR 12 1988	Shelf Mounting Mug and Cup Rack (2323)	Granted
ited States	766,181	AUG 16 1985	D-295,127	APR 12 1988	Wrap Rack (2329)	Granted
ited States	782,985	OCT 02 1985	D-295,129	APR 12 1988	Spice Rack (2301)	Granted
ited States	782,984	OCT 02 1985	D-295,247	APR 19 1988	2303 Caddy / 2305 Kitchen Organizer	Granted
ited States	766,184	AUG 16 1985	D-296,601	JUL 05 1988	Storage Basket	Granted
ited States	790,823	OCT 24 1985	D-297,489	SEP 06 1988	Lid (Organizer) Rack - #2317	Granted
ited States	778,924	SEP 23 1985	D-298,990	DEC 20 1988	Shower Shelf (2553)	Granted
ited States	139,945	DEC 31 1987	D-302,222	JUL 18 1989	Tissue Holder (1008)	Granted
ited States	231,241	AUG 12 1988	D-308,640	JUN 19 1990	Microwave Leak Detector	Granted
ited States	231,244	AUG 12 1988	D-312,183	NOV 20 1990	Toothbrush Tumbler Holder	Granted

fin Granted and Pending Patent Files by Country, Then Patent Number
e: 14 Dater 04 DEC 1997

ntry.....	App No.....	App Date.....	Pat No.....	D.O.G.....	Title.....	Status.....
					(3207)	
ted States	231,237	AUG 12 1988	D-312,935	DEC 18 1990	Towel Bar (3212/3218/3224)	Granted
ted States	231,243	AUG 12 1988	D-314,108	JAN 29 1991	Bath Tissue Holder with Roller (3209/3298)	Granted
ted States	07/231,239	AUG 12 1988	D-314,485	FEB 12 1991	Soap Dish (3202/21)	Granted
ted States	297,595	JAN 17 1989	D-314,487	FEB 12 1991	Wall Mountable Caddy (2356)	Granted
ted States	297,086	JAN 13 1989	D-314,484	FEB 19 1991	Appliance and Accessories Organizer (2355)	Granted
ited States	139,941	DEC 31 1987	D-315,860	APR 02 1991	Double Hook (1010)	Granted
ited States	231,236	AUG 12 1988	D-320,119	SEP 24 1991	Double Hook (3210)	Granted
ited States	07/231,238	AUG 12 1988	D-321,794	NOV 26 1991	Hook (3201)	Granted
ited States	29/006,671	APR 02 1993	D-353,292	DEC 13 1994	Closet Extender (7425)	Granted
ited States	29/016,688	DEC 20 1993	D-354,550	JAN 17 1995	Bathtub Spout Protective Cover (Dolphin Design)	Granted
ited States	29/016,601	DEC 20 1993	D-357,151	APR 11 1995	Combination Toothbrush And Cup Holder	Granted
ited States	29/016,593	DEC 20 1993	D-357,153	APR 11 1995	Soap Dish Design	Granted
ited States	29/021,577	APR 20 1994	D-360,299	JUL 18 1995	Under Bed Storage Trolley	Granted
ited States	29/020,296	MAR 23 1994	D-362,774	OCT 03 1995	Hair Dryer Hook(Design)	Granted
ited States	29/036,989	MAR 31 1995	D-367,790	MAR 12 1996	Shower Caddy Extender (2152)	Granted
ited States	29/036,975	MAR 31 1995	D-367,793	MAR 12 1996	Over Door Towel Rack (2170)	Granted

flx Granted and Pending Patent Files by Country, Then Patent Number

ber 15 Date: 04 DEC 1997

ntry.....	App No.....	App Date.....	Pat No.....	D.O.G.....	Title.....	Status.....
ited States	29/037,645	MAR 31 1995	D-368,614	APR 09 1996	Under Vanity Organizer Design (2130)	Granted
ited States	29/041,887	JUL 26 1995	D-370,828	MAY 21 1996	Organizer (588)	Granted
ited States	29/042,366	AUG 09 1995	D-370,809	JUN 18 1996	Shower Caddy (2193)	Granted
ited States	29/042,390	AUG 09 1995	D-370,810	JUN 18 1996	Arcuate Shower Caddy (2173)	Granted
ited States	29/041,884	JUL 26 1995	D-370,816	JUN 18 1996	Mirror With Hooks (2291)	Granted
ited States	29/041,649	JUL 20 1995	D-370,936	JUN 18 1996	Tackboard With Key Hooks (595)	Granted
ited States	29/042,369	AUG 09 1995	D-371,031	JUN 25 1996	Shower Caddy (2191)	Granted
ited States	29/041,881	JUL 26 1995	D-371,163	JUN 25 1996	Message Center (582)	Granted
ited States	29/042,368	AUG 09 1995	D-371,484	JUL 09 1996	Shelf With Hooks (770)	Granted
ited States	29/042,122	AUG 01 1995	D-373,407	SEP 03 1996	Faucet Connector (443)	Granted
nited States	29/042,524	AUG 11 1995	D-376,941	DEC 31 1996	Shower Caddy Design (2196)	Granted
nited States	29/048,344	DEC 26 1995	D-376,942	DEC 31 1996	Shower Caddy -- Wide (2263)	Granted
nited States	29/048,346	DEC 26 1995	D-377,286	JAN 14 1997	Shower Caddy -- Tall (2295)	Granted
nited States	29/048,852	DEC 22 1995	D-377,309	JAN 14 1997	Over Door Hook (8173)	Granted
nited States	29/048,289	DEC 22 1995	D-377,599	JAN 28 1997	Hook -- Four (8694)	Granted
nited States	29/049,024	DEC 26 1995	D-378,556	MAR 25 1997	Shower Caddy -- Extra Large (2253)	Granted
nited States	139,933	DEC 31 1987	D301,955	JUL 04 1989	Towel Bar (1018/24)	Granted
nited States	139,946	DEC 31 1987	D302,223	JUL 18 1989	Bathroom Frame Fixture (1002/7)	Granted

TRADEMARK
REEL: 1815 FRAME: 0773

Ix Granted and Pending Patent Files by Country, Then Patent Number
: 16 Date: 04 DEC 1997

try.....	App No.....	App Date.....	Pat No.....	D.O.G.....	Title.....	Status.....
ed States	29/046,286	NOV 13 1995	D383,918	SEP 23 1997	Lap Top Desk(7075)	Granted
ed States	29/048,799	DEC 22 1995	D385,479	OCT 28 1997	Hook -- Double (8692)	Granted
ed States	29/048,851	DEC 22 1995	D386,389	NOV 18 1997	Hook (8690)	Granted
ed States	29/064,606	JAN 07 1997	D387,592	DEC 16 1997	Dolphin Shower Caddy (2178)	Granted
ed States	29/064,617	JAN 07 1997	D387,593	DEC 16 1997	Penguin Shower Caddy (2176)	Granted
ed States	29/066,419	FEB 14 1997	D387,594	DEC 16 1997	Bath Tub Caddy (2131)	Granted
ted States	29/066,490	FEB 14 1997	D387,595	DEC 16 1997	Adjustable Shower Caddy (2195)	Granted
ted States	587,343	MAR 08 1984	RE32,269	JUN 22 1982	Plastic Clip	Granted

TRADEMARK
REEL: 1815 FRAME: 0774

EC 1997 Selfix INc Page: 1

...try.....	Mark.....	Appl'n Number.	Appln Date..	Reg. Number..	Reg. Date..	Status....
...ntina	DURA-COATED	1995065	DEC 29 1982	1612877	AUG 24 1990	Registered
...ntina	LOC-LEGS	1359598	DEC 29 1982	1514045	MAR 08 1984	Registered
...ntina	LOCK-LIP	1359597	DEC 29 1982	1514044	MAR 08 1984	Registered
...ntina	PEEL N STICK	1345383	SEP 14 1982	1474980	SEP 08 1983	Registered
...ntina	SELFIX	1258357	OCT 06 1980	1540643	JUL 10 1995	Registered
...ntina	WET 'N SET	1840871	APR 06 1981	1465111	AUG 31 1993	Registered
...tralia	CLEARFLO	358927	APR 09 1981	358927	APR 09 1981	Registered
...tralia	DURA-COATED	390813	MAY 03 1983	390813	MAY 03 1983	Registered
...tralia	MAGIC CIRCLE	303301	DEC 21 1976	303301	DEC 21 1976	Registered
...tralia	MAGIC CIRCLE	323566	DEC 21 1976	323566	DEC 21 1976	Registered
...tralia	MAGIC CIRCLE	323567	DEC 21 1976	323567	DEC 21 1976	Registered
...tralia	PEEL 'N STICK	476521	NOV 16 1987	476521	NOV 16 1987	Registered
...tralia	PEEL 'N STICK	476522	NOV 16 1987	476522	NOV 16 1987	Registered
...tralia	SELFIX	286780	APR 28 1975	286780	APR 28 1975	Registered
...tralia	SELFIX	303298	APR 28 1975	303298	APR 28 1975	Registered
...tralia	SELFIX	303299	APR 28 1975	303299	APR 28 1975	Registered
...tralia	SELFIX	303300	APR 28 1975	303300	APR 28 1975	Registered
...tralia	SELFIX	390812	MAY 03 1983	390812	MAY 03 1983	Registered
...tralia	WET 'N SET	323568	DEC 21 1976	323568	DEC 21 1976	Registered
...tralia	WET 'N SET	303302	DEC 21 1976	303302	DEC 21 1976	Registered

ntry.....	Mark.....	Appl'n Number.	Appln Date..	Reg. Number..	Reg. Date..	Status....
elux	MAGIC CIRCLE	39105	JUN 27 1977	347509	APR 06 1978	Registered
elux	SELFIX	39104	JUN 27 1977	347009	FEB 13 1978	Registered
elux	WET 'N SET	45267	MAR 17 1981	374605	FEB 19 1982	Registered
zil	SELFIX	819315273	JUN 05 1996			Pending
zil	SELFIX	819315281	JUN 05 1996			Pending
zil	SELFIX	819315281	JUN 05 1996			Pending
ade	CLEARFLO	477980	NOV 06 1981	289859	APR 13 1984	Registered
ade	DURA-BUILT	506828	JUN 25 1987	343671	AUG 12 1988	Registered
ade	DURA-COATED	552516	NOV 12 1985	318074	SEP 05 1986	Registered
ade	DURAPREME	650863	FEB 14 1990	399873	JUN 12 1992	Registered
ade	LOCK LIP	337537	NOV 02 1970	181610	MAR 03 1972	Registered
ade	SELFIX	292447	OCT 08 1965	149704	MAR 17 1967	Registered
ade	SELFIX	337536	NOV 02 1970	179852	DEC 03 1971	Registered
ade	WET 'N SET	477968	NOV 06 1981	271577	AUG 06 1982	Registered
le	MAGIC CIRCLE	58820	MAY 15 1979	229282	APR 17 1980	Registered
le	MAGIC CIRCLE	58821	MAY 15 1979	229283	APR 17 1980	Registered
le	SELFIX	166461	MAY 15 1979	368048	JAN 12 1991	Registered
le	SELFIX	58818	MAY 15 1979	229099	APR 10 1980	Registered
able	SELFIX	96007842	FEB 20 1996			Pending

untry.....	Mark.....	Appl'n Number.	Appln Date..	Reg. Number..	Reg. Date..	Status....
lombia	SELFIX	96007043	FEB 20 1996	188521	AUG 23 1996	Registered
mark	SELFIX	1004195	DEC 29 1995			Pending
opean Commun	SELFIX	211318	APR 01 1996			Pending
nce	SELFIX	866171	JUL 09 1987	1455954	JUL 09 1987	Registered
nce	TIDY KIDS	93455905	FEB 18 1993	93455905	FEB 18 1993	Registered
nce	WET 'N SET	275575	MAR 23 1981	1651990	MAR 23 1981	Registered
rmany	SELFIX	2410011	DEC 28 1970	901321	JAN 12 1973	Registered
rmany	SELFIX	302821	JUN 23 1977	971859	JUN 05 1978	Registered
rmany	TIDY KIDS	5600220	FEB 17 1993	2072219	JUL 21 1994	Registered
eat Britain	CLEARFLO	1152626	APR 15 1981	1152626	APR 15 1981	Registered
eat Britain	DURA-COAT	1108378	JAN 11 1983	1108378	JAN 11 1983	Registered
eat Britain	MAGIC CIRCLE	1078063	MAY 05 1977	1078063	MAY 05 1977	Registered
eat Britain	MAGIC CIRCLE	1080364	JUN 29 1977	1080364	JUN 29 1977	Registered
eat Britain	SELFIX	1200483	JUL 26 1983	1200483	JUL 26 1983	Registered
eat Britain	SELFIX	1200484	JUL 26 1983	1200484	JUL 26 1983	Registered
eat Britain	SELFIX	1200485	JUL 26 1983	1200485	JUL 26 1983	Registered
eat Britain	SELFIX	1200486	JUL 26 1983	1200486	JUL 26 1983	Registered
eat Britain	SELFIX	885130	OCT 04 1965	885130	OCT 04 1965	Registered
eat Britain	SELFIX	885133	OCT 04 1965	885133	OCT 04 1965	Registered
eat Britain	TIDY KIDS	1514653	OCT 23 1992	1514653	OCT 23 1992	Registered

ntry.....	Mark.....	Appl'n Number.	Appln Date..	Reg. Number..	Reg. Date..	Status....
at Britain	WET 'N SET	1173816	APR 23 1982	1173816	APR 23 1982	Registered
at Britain	WET 'N SET	1173817	APR 23 1982	1173817	APR 23 1982	Registered
at Britain	WET 'N SET	1173818	APR 23 1982	1173818	APR 23 1982	Registered
g Kong	MAGIC CIRCLE AN	99788	SEP 16 1977	1444	APR 25 1980	Registered
g Kong	SELFIX	82278	MAY 04 1978	1549	SEP 16 1980	Registered
eel	MAGIC CIRCLE	44298	JUN 26 1977	44298	JAN 17 1980	Registered
eel	SELFIX	44297	JUN 26 1977	44297	JAN 17 1980	Registered
ly	GRECIAN SPLENDO	1000282	MAR 12 1982	405704	FEB 17 1984	Registered
an	IP CLIP	1263391984	DEC 05 1984			Pending
an	IP CLIP	607921983	JUN 29 1983			Pending
an	MAGIC CIRCLE	52834346	MAY 20 1977	2175312	SEP 29 1989	Registered
an	SELFIX	798728		798728	NOV 29 1968	Registered
ico	SELFIX	49534	SEP 28 1977	359750	APR 14 1978	Registered
gapore	CLEARFLO	173881	APR 16 1981	173881	APR 16 1981	Registered
gapore	MAGIC CIRCLE	73657	NOV 16 1977	73657	NOV 16 1977	Registered
gapore	SELFIX	42385	JAN 30 1985	42385	JAN 30 1985	Registered
gapore	SELFIX	42485	JAN 30 1985	42485	JAN 30 1985	Registered
gapore	SELFIX	482981	OCT 30 1981	482981	AUG 13 1988	Registered
th Africa	SELFIX	09712655	AUG 20 1997			Pending

ıtry.....	Mark.....	Appl'n Number.	Appln Date..	Reg. Number..	Reg. Date..	Status....
th Africa	SELFIX	756951	DEC 30 1975	756951	MAR 30 1980	Registered
ızerland	MAGIC CIRCLE	5746	NOV 25 1977	292866	MAY 29 1978	Registered
tzerland	SELFIX	5747	NOV 25 1977	292867	MAY 31 1978	Registered
ıan	DURA-COATED	224821	JUL 16 1983	224821	OCT 16 1983	Registered
ıan	MAGIC CIRCLE		OCT 01 1978	104972	OCT 01 1978	Registered
ıan	SELFIX		OCT 01 1978	104971	OCT 01 1978	Registered
ıan	SELFIX	220878	JUN 01 1983	220878	SEP 01 1983	Registered
ıan	SELFIX	224822	JUL 16 1983	224822	OCT 16 1983	Registered
ıan	SELFIX	265983	DEC 01 1984	265983	DEC 01 1984	Registered
ted States	ALL-SIZE	74/395,264	MAY 26 1993	1,826,373	MAR 15 1994	Registered
ted States	BABY BASICS	74/591,930	OCT 28 1994	2,089,547	AUG 19 1997	Registered
ted States	CLEARFLO	335,542	NOV 04 1981	1,236,165	MAY 03 1983	Registered
ıted States	DURA-BILT	616,578	AUG 25 1986	1,439,197	MAY 12 1987	Registered
ited States	DURA-BRITE	74/306,062	AUG 18 1992	1,798,717	OCT 12 1993	Granted
ited States	DURA-CHROME	500,704	FEB 03 1986	1,406,775	AUG 26 1986	Registered
ited States	DURA-COATED	356,674	MAR 26 1982	1,251,159	SEP 13 1983	Registered
ited States	DURA-GLIDE	74/139,404	FEB 15 1991	1,710,778	AUG 25 1992	Registered
ited States	DURAPRENE	74/010,776	DEC 14 1989	1,642,448	APR 23 1992	Registered
ited States	Design (Shutter	738,157	JUL 05 1988	1,542,546	JUN 06 1989	Registered
ited States	EUROHOOKS	73/828,653	OCT 02 1989	1,598,637	MAY 29 1990	Registered

ntry.....	Mark.....	Appl'n Number.	Appln Date..	Reg. Number..	Reg. Date..	Status....
ited States	FLEX-GRIP	74/139,182	FEB 14 1991	1,714,674	SEP 08 1992	Registered
ited States	GRIPPER	293,590	MAR 18 1968	873,315	JUL 22 1969	Registered
ited States	HANG TIME	74/348,178	JAN 13 1993	1,853,091	SEP 06 1994	Registered
ited States	HOME PRODUCTS I	75/264,337	MAR 26 1997			Pending
ited States	HOME-HELPERS	503,537	FEB 18 1986	1,447,127	JUL 14 1987	Registered
ited States	HPI	75/264,425	MAR 26 1997			Pending
ited States	IP CLIP	312,092	MAY 26 1981	1,191,202	MAR 02 1982	Registered
ited States	IP CLIP (STYLIZ	73/312,092	MAY 26 1981	1,191,202	MAR 02 1982	Registered
ited States	IPC (STYLIZED)	73/221,722	JUN 29 1979	1,156,424	JUN 02 1981	Registered
ited States	IPC (Stylized)	221,722	JUN 29 1979	1,156,424	JUN 02 1981	Registered
ited States	IPC ORGANIZER	590,851	MAR 31 1986	1,421,109	DEC 16 1986	Registered
ited States	KiDTIVITY	75/011,315	OCT 27 1995	2,040,022	MAY 06 1997	Registered
ited States	LOC-LEGS	389,165	SEP 27 1982	1,268,430	FEB 28 1984	Registered
ited States	LOCK-LIP	72/339,457	OCT 01 1969	896,315	AUG 11 1970	Registered
ited States	MISCELLANEOUS D	506,906	MAR 07 1986	1,423,939	JAN 06 1987	Registered
ited States	PEEL 'N STICK	250,439	FEB 19 1980	1,229,795	MAR 08 1983	Registered
ited States	PLAY STACKERS	74/548,774	JUL 13 1994	2,024,341	DEC 17 1996	Registered
ited States	QUALITY HOUSEHA	566,286	NOV 01 1985	1,457,450	SEP 15 1987	Registered
ited States	SAFETY SOURCE	74/668,367	APR 21 1995	2,044,731	MAR 11 1997	Granted

ntry.....	Mark.....	Appl'n Number.	Appln Date..	Reg. Number..	Reg. Date..	Status....
ted States	SELFIX	057,473	JUL 11 1975	1,061,097	MAR 15 1977	Registered
ted States	SELFIX	231,495	OCT 23 1945	817,656	NOV 01 1946	Registered
ted States	SELFIX	339,458	OCT 01 1969	902,488	NOV 17 1970	Registered
ted States	SELFIX	411,833	JAN 05 1972	938,467	JUL 25 1972	Registered
ted States	SHU SHAPE	300,275	APR 30 1981	1,197,305	JUN 08 1982	Registered
ted States	SHU SHAPE (STYL	73/300,275	APR 30 1981	1,197,305	JUN 08 1982	Registered
ted States	SPACE WORKS	73/825,151	SEP 14 1989	1,596,479	MAY 15 1990	Registered
ted States	STOR'N STACK	777,729	JAN 30 1989	1,555,801	SEP 12 1989	Registered
ted States	SUCTION LOCK	386,244	MAR 12 1971	924,581	NOV 30 1971	Registered
ted States	SUCTION LOCK	75/182,854	OCT 17 1996			Pending
ited States	SURE-LOCK	559,465	SEP 23 1985	1,394,905	MAY 27 1986	Registered
ited States	SWIVELER	73/284,942	NOV 06 1980	1,349,644	JUL 16 1985	Registered
ited States	SWIVELER	284,942	NOV 06 1980	1,349,644	JUL 16 1985	Registered
ited States	THE INCREASER	235,898	OCT 19 1979	1,160,155	JUL 07 1981	Registered
ited States	THE INCREASER	73/235,898	OCT 19 1979	1,160,155	JUL 07 1981	Registered
ited States	TIDY KIDS	74/306,860	AUG 18 1992	1,790,716	OCT 12 1993	Registered
ited States	WET 'N SET	251,306	FEB 25 1980	1,248,344	AUG 16 1983	Registered

Patents Owned by Tamor

Design Patent No. 270,118
August 15, 1983
Shoe Rack

Design Patent No. 324,594
March 10, 1992
Waste Container

Design Patent No. 340,137
Hanger

Trademarks Owned by Tamor

See Attached

886496v01:MXM 12/17/97 5:08 PM

TRADEMARKS OWNED BY TAMOR PLASTICS CORP.

MARK	SECTION 8/15	RENEWAL DATE
JELLY BEANS Reg. No. 1,155,728 May 26, 1981	Section 8 & 15 Filed 10/27/86	5/26/2001
PETITE Reg. No. 1,149,434 March 24, 1981	Section 8 Filed 10/23/86	3/24/2001
HEAVENLY HOUSE Reg. No. 1,179,331 November 24, 1981	Section 8 & 15 Filed 7/1/87	11/24/2001
GR-R-PIP TITE Reg. No. 1,288,482 July 31, 1984	Section 8 Filed 7/23/90	7/31/2004
ATTACHABLES Reg. No. 1,334,294 May 7, 1985	Section 8 & 15 Filed 8/20/90	5/7/2005
CHEERFULS Reg. No. 1,070,286 July 26, 1977	Section 8 Filed 11/22/82	7/26/1997
TAMOR (design) Reg. No. 1,645,272 May 21, 1991	TO BE FILED 5/21/96	5/21/2001
TAMOR (word) Reg. No. 1,788,182 August 17, 1993	TO BE FILED 8/17/98	8/17/2003
PRODUCTS OF DISTINCTION Reg. No. 1,923,680 October 3, 1995	TO BE FILED 10/3/2000	10/3/2005
LIL' HELPERS Reg. No. 1,917,978 September 12, 1995	TO BE FILED 9/12/2000	9/12/2005
SMART SOLUTIONS... Reg. No. 1,680,427 March 24, 1992	TO BE FILED 5/24/97	3/24/2002

LIST OF PROSPECTIVE TRADEMARKS OF TAMOR PLASTICS CORP.

Stor-n-Tote

Flat-Tops

Flat-Top

Home Helpers (owned by Selfix)

Stor-n-View

Home Solutions

Kitchen Helpers

Kitchen Solutions

Intellectual Property

1. Patents and Patent Applications: See attached.

2. Trademarks and Trademark Applications: See attached.

3. Copyrights and Copyright Applications: See attached.

4. Designs and Utility Models: See attached.

5. Licenses:

   a. Patent License Agreement, effective as of January 1, 1983, by and between Raytheon Company, a Delaware corporation, having its principal office at 141 Spring Street, Lexington, Massachusetts 02173 (Licensor), and Anchor Hocking, a Delaware corporation, having its principal office at 109 North Broad Street, Lancaster, Ohio 43130 (Licensee).

   b. Warner Bros. License Agreement #3997-WBLT, dated March 7, 1994, by and between Warner Bros. Consumer Products on behalf of itself and as Agent for Warner Bros. Division of Time Warner Entertainment Company, L.P., and Plastics, Inc.

   c. License Agreement made the 12th day of June, 1992, by and between CSC Advertising, Inc., a New Jersey corporation, with its principal place of business in Camden, New Jersey, acting on behalf of its parent company and principal, Campbell Soup Company, and Anchor Hocking Plastics, an Illinois corporation with its principal place of business at 224 Ryan Avenue, St. Paul, MN 55102-2586.

[INTELLECTUAL PROPERTY
ACQUIRED IN NEWELL ACQUISITION

ANCHOR HOCKING PLASTICS

Schedule of Trademarks

TRADEMARK	COUNTRY	APP. NO.	REG. NO.	STATUS	OWNER	APP. DATE	REG. DATE	RENEWAL	CLS	GOODS
DIVIDED PLATE CONFIGURATION	U.S.A.	73/836048	1756275	G	PLASTICS	02NO1989	02MR1993	02MR2003	21	PLATES FOR USE IN STORIN HEATING AND SERVING FOOD DOMESTIC USE
FREEZE HEAT & SERVE	U.S.A.	73/544454	1399047	G	ANCHOR	24JE1985	24JE1986	24JE2006	21	OVENWARE, NAMELY, BAKING DISHES
HI-HEAT	U.S.A.	73/454028	1330914	G	PLASTICS	23NO1983	16AP1985	16AP2005	21	PLASTIC CASSEROLES, PLAS PLATES, PLASTIC DISHES, PLASTIC COOKING SHELLS
HI-HEAT & DESIGN	U.S.A.	72/252413	838990	G	PLASTICS	15AU1966	21NO1967	21NO2007	21	PLASTIC TRAYS, PLASTIC DISHWARE, AND PLASTIC CUP
JAREEN	U.S.A.	73/684613	1488511	G	NEWELL	17SE1987	17MY1988	17MY2008	21	PLASTIC CONTAINERS FOR DOMESTIC USE, CONSISTING JARS, BOWLS AND BEVERAGE DISPENSERS
JET LINER & DESIGN	U.S.A.	72/140585	743608	G	PLASTICS	23MR1962	15JA1963	15JA2003	21	PLASTIC DISHES
KLEAR POR	U.S.A.	73/802885	1580141	G	NEWELL	26MY1989	30JA1990	30JA2000	21	BOTTLES, AND PLASTIC CONTAINERS FOR DOMESTIC AN INDUSTRIAL USE

TRADEMARK
REEL: 1815 FRAME: 0786

ANCHOR HOCKING PLASTICS

Schedule of Trademarks

TRADEMARK	COUNTRY	APP. NO.	REG. NO.	STATUS	OWNER	APP. DATE	REG. DATE	RENEWAL	CLS	GOODS
KLEAR STOR	U.S.A.	73/802886	1580142	G	NEWELL	26MY1989	30JA1990	30JA2000	21	BOTTLES, AND PLASTIC CONTAINERS FOR DOMESTIC INDUSTRIAL USE
KOLOR STOR	U.S.A.	74/374251	1815940	G	NEWELL	30MR1993	11JA1994	11JA2004	21	ALL PURPOSE PORTABLE HOUSEHOLD CONTAINERS
LOGIX	U.S.A.	74/713068	1988568	G	PLASTICS	09AU1995	23JL1996	23JL2006	20	MERCHANDISING RACK SYSTE FOR PLASTIC STORAGE CONTAINERS
MICROPROOF	U.S.A.	72/281391	861216	G	PLASTICS	28SE1967	03DE1968	03DE2008	21	PLASTIC DISHWARE USABLE MICROWAVE OVEN AND USED SERVING FOOD
MICROWARE	U.S.A.	72/385128	939320	G	PLASTICS	01MR1971	01AU1972	01AU2002	21	PLASTIC PLATES, BOWLS, A BOWL COVERS
MICROWARE	U.S.A.	73/128299	1135775	G	ANCHOR	16MY1977	20MY1980	20MY2000	21	PLASTIC OVENWARE - NAMELY ROASTING RACKS, BACON RA MUFFIN PANS AND BAKING R
MICROWARE	U.S.A.	73/137840	1148955	G	ANCHOR	17AU1977	24MR1981	24MR2001	21	PLASTIC OVENWARE - NAMELY BAKING SHEETS
POP-TOP STORABLES	U.S.A.	73/778455	1590927	G	PLASTICS	02FE1989	10AP1990	10AP2000	21	FOOD STORAGE CONTAINERS

TRADEMARK
REEL: 1815 FRAME: 0787

ANCHOR HOCKING PLASTICS

Schedule of Trademarks

TRADEMARK	COUNTRY	APP. NO.	REG. NO.	STATUS	OWNER	APP. DATE	REG. DATE	RENEWAL	CLS	GOODS
PRESTIGE	U.S.A.	74/415103	1869622	G	PLASTICS	21JL1993	27DE1994	27DE2004	21	PLASTICWARE; NAMELY, BOWL PITCHERS, PLATES, TRAYS A BEVERAGEWARE
SCROLLWARE	U.S.A.	73/508411	1409462	G	ANCHOR	13NO1984	16SE1986	16SE2006	21	PLASTIC DINNERWARE
STOWAWAYS	U.S.A.	74/352346	1863234	G	PLASTICS	21JA1993	15NO1994	15NO2004	21	PLASTIC STORAGE CONTAINER FOR HOUSEHOLD OR KITCHEN
STOWAWAYS & DESIGN	U.S.A.	74/352345	1864748	G	PLASTICS	21JA1993	29NO1994	29NO2004	21	PLASTIC STORAGE CONTAINER FOR HOUSEHOLD OR KITCHEN
THE COMPLETE FOOD STORAGE SYSTEM	U.S.A.	74/352344	1835039	G	PLASTICS	21JA1993	03MY1994	03MY2004	21	PLASTIC STORAGE CONTAINERS FOR HOUSEHOLD OR KITCHEN
THIRST PODZ	U.S.A.	75/034759		F	PLASTICS	19DE1995			21	PLASTIC BEVERAGE CONTAINER
HI-HEAT	CANADA	315791	163445	G	PLASTICS	04SE1968	13JE1969	13JE1999	n/a	PLASTIC TRAYS, PLASTIC DISHWARE, PLASTIC CUPS, AN ASHTRAYS
HI-HEAT	CANADA	506454	289176	G	PLASTICS	05JL1983	23MR1984	23MR1999	n/a	PLASTIC CASSEROLES, PLASTI PLATES, PLASTIC DISHES, AN PLASTIC SHELLS

TRADEMARK
REEL: 1815 FRAME: 0788

ANCHOR HOCKING PLASTICS

Schedule of Trademarks

TRADEMARK	COUNTRY	APP. NO.	REG. NO.	STATUS	OWNER	APP. DATE	REG. DATE	RENEWAL	CLS	GOODS
MICROWARE	CANADA	410287	231267	G	ANCHOR	03MY1977	22DE1978	22DE2008	n/a	PLASTIC OVENWARE, NAMELY, ROASTING RACKS, BACON RA MUFFIN PANS AND BAKING RI
POP-TOP STORABLES	CANADA	639310	375893	G	NEWELL CAN	25AU1989	16NO1990	16NO2005	n/a	FOOD STORAGE CONTAINERS
SCROLLWARE	CANADA	536788	315527	G	ANCHOR	19FE1985	20JE1986	20JE2001	n/a	PLASTIC BEVERAGEWARE
SCROLLWARE	CANADA	627704	366026	G	ANCHOR	17MR1989	23FE1990	23FE2005	n/a	CHINA DINNERWARE, GLASS DINNERWARE, CERAMIC DINNERWARE AND PLASTIC DINNERWARE
STOWAWAYS	CANADA	733042	482272	G	ANCHOR	15JL1993	09SE1997	09SE2012	n/a	PLASTIC STORAGE CONTAINERS NAMELY HOUSEHOLD DOMESTIC LIDDED AND AIRTIGHT PLASTI CONTAINERS IN DISSIMILAR SIZES NOT EXCEEDING THREE GALLONS IN VOLUME

Abbreviations:

G = Granted (registered)
F = Filed status

Owner Codes:

PLASTICS	=	Plastics, Inc.
ANCHOR	=	Anchor Hocking Corporation
NEWELL	=	Newell Company
NEWELL CAN	=	Newell Industries Canada, Inc.

TRADEMARK
REEL: 1815 FRAME: 0789

ANCHOR HOCKING PLASTICS

Schedule of Copyrights

TITLE	DOCKET NO.	COUNTRY	REG. NO.	REG. DATE	OWNER	EXPIRATION
Daisy and Tulip Design	20157/138	USA	VA 340426	23 FE 1989	Plastics, Inc.	31 DE 2064
Iris Design	20157/139	USA	VA 340427	23 FE 1989	Plastics, Inc.	31 DE 2064

TRADEMARK
REEL: 1815 FRAME: 0790

ANCHOR HOCKING PLASTICS PATENT STATUS REPORT
July 14, 1998

Docket No.	Title	Current Owner	Inventor(s)	Cty	Appl. No.	Appl. Date	Patent No.	Patent Date	Status
73948/170	Container System Including a Colander	Plastics, Inc.	Woodnorth, Brian E. Gaston, Johannes N. Van Ornum, Douglas J.	USA	08/775492	31 DE 1996			F
73948/172	Container System Including an Air Evacuation Valve	Plastics, Inc.	Woodnorth, Brian E. Theis, Gregory A. Leenerts, Roger A. McCarthy, Richard O. Stanca, Nick E.	USA	08/918824	26 AU 1997			F
73948/173	Lunch Holder for Holding a Food Product and a Beverage Container	Plastics, Inc.	Woodnorth, Brian E. Levin, Monte L.	USA	08/918861	26 AU 1997			F
73948/171	A Two-Piece Integral Lid That Effects a Double Seal for a Dry Food Storage Container System	Plastics, Inc.	Woodnorth, Brian E. Kramer, Thomas E. Wahoske, Bradley Gile Rust, Matthew Howard Theis, Gregory A. Leenerts, Roger A.	USA	08/934724	22 SE 1997			F
73948/185	A Comolded Screw-Top/Flip Lid Assembly	Plastics, Inc.	Theis, Gregory A. Van Keuren, Dick E.	USA	08/957508	24 OC 1997			F
73948/189	Container Assemblies of Different Sizes which Stack, Nest and Assemble Separately and in Combination	Plastics, Inc.	Andress, Bradley W. Rude, Dale V.	USA	09/014353	27 JA 1998			F
73948/187	Elastomer Sealing of Food Containers	Plastics, Inc.	Thies, Gregory A. Schmidt, James	USA	60/070833	08 JA 1998			F

ANCHOR HOCKING PLASTICS PATENT STATUS REPORT
July 14, 1998

Docket No.	Title	Current Owner	Inventor(s)	Cty	Appl. No.	Appl. Date	Patent No.	Patent Date	Status
73948/108	Portable Turntable for Ovens	Plastics, Inc.	Pomeroy, James F. Colato, Albert E.	USA	06/131505	18 MR 1980	4330696	18 MY 1982	G
73948/109	Drive Motor Assembly for Use in a Microwave Oven	Plastics, Inc.	Danley, Allen M. Colato, Albert E.	USA	06/131507	18 MR 1980	4330697	18 MY 1982	G
73948/110	Spinning Lathe	Plastics, Inc.	Rolin, Guy Rabizzoni, Jacques	USA	06/342805	26 JA 1982	4509351	09 AP 1985	G
73948/111	Microwave Oven Turntable Shelf Structure and Method	Plastics, Inc.	Colato, Albert E.	USA	06/047016	11 JE 1979	4593171	03 JE 1986	G
73948/112	Microwave Oven Turntable Shelf Structure	Plastics, Inc.	Colato, Albert E.	USA	06/869599	02 JE 1986	4713513	15 DE 1987	G
73948/113	Microwave Oven Rotisserie Assembly	Plastics, Inc.	Colato, Albert E.	USA	06/047013	11 JE 1979	4717802	05 JA 1988	G
73948/114	Storage and Cooking Container With Lid Release Tab	Plastics, Inc.	Pomroy, James F.	USA	07/142502	11 JA 1988	4809868	07 MR 1989	G
73948/115	Portable Turntable with Shielded Drive Motor for Microwave Ovens	Plastics, Inc.	Pomroy, James F. Colato, Albert E.	USA	06/336084	31 DE 1981	4886948	12 DE 1989	G
73948/116	Lunch Holder	Plastics, Inc.	Pomroy, James F. Traxler, Eva M.	USA	07/874902	28 AP 1992	5277329	11 JA 1994	G
73948/117	Lunch Holder	Plastics, Inc.	Pomroy, James F. Traxler, Eva N.	USA	08/168670	15 DE 1993	5323926	28 JE 1994	G

ANCHOR HOCKING PLASTICS PATENT STATUS REPORT
July 14, 1998

Docket No.	Title	Current Owner	Inventor(s)	Cty	Appl. No.	Appl. Date	Patent No.	Patent Date	Status
73948/118	Double Seal Container	Plastics, Inc.	Andreas, Bradley W. Rude, Dale V. Vankeuren, Dick E.	USA	08/034902	22 MR 1993	5356026	18 OC 1994	G
73948/119	Lunch Holder	Plastics, Inc.	Pomroy, James F. Traxler, Eva M.	USA	08/251894	01 JE 1994	5462192	31 OC 1995	G
73948/105	Container Assemblies of Different Sizes which Stack, Nest and Assemble Separately and in Combination	Plastics, Inc.	Andreas, Bradley W. Rude, Dale V. Vankeuren, Dick E.	USA	08/273957	12 JL 1994	5769229	23 JE 1998	G
73948/120	Turntable for Use in Microwave Oven	Plastics, Inc.	Pomroy, James F.	USA	06/536949	27 SE 1983	D 283195	01 AP 1986	G
73948/121	Microwave Oven Covered Dish	Plastics, Inc.	Pomroy, James F.	USA	06/672715	19 NO 1984	D 287917	27 JA 1987	G
73948/122	Turntable for Use in Microwave Ovens	Plastics, Inc.	Pomroy, James F.	USA	06/715109	22 MR 1985	D 291854	15 SE 1987	G
73948/123	Combined Bowl and Stem for a Goblet or the Like	Plastics, Inc.	Pomroy, James F.	USA	06/662993	19 OC 1984	D 293 992	02 FE 1988	G
73948/124	Goblet or Similar Article	Plastics, Inc.	Pomroy, James F.	USA	07/085011	13 AU 1987	D 295480	03 MY 1988	G
73948/125	Rack For Food Products	Plastics, Inc.	Pomroy, James F.	USA	06/746657	20 JE 1985	D 296409	28 JE 1988	G
73948/126	Dessert Cup or Similar Article	Plastics, Inc.	Pomroy, James F.	USA	07/085009	13 AU 1987	D 298902	13 DE 1988	G

ANCHOR HOCKING PLASTICS PATENT STATUS REPORT
July 14, 1998

Docket No.	Title	Current Owner	Inventor(s)	Cty	Appl. No.	Appl. Date	Patent No.	Patent Date	Status
73948/127	Popcorn Popper	Plastics, Inc.	Pomroy, James F.	USA	06/826751	06 FE 1986	D 299106	27 DE 1988	G
73948/128	Tumbler	Plastics, Inc.	Pomroy, James F.	USA	06/568494	05 JA 1984	D 300705	18 AP 1989	G
73948/129	Coffee Mug	Plastics, Inc.	Fleming, Sharon A. Wheeler, Colleen A.	USA	07/073628	15 JL 1987	D 306111	20 FE 1990	G
73948/130	Pitcher	Plastics, Inc.	Pomroy, James F.	USA	07/059396	08 JE 1987	D 309077	10 JL 1990	G
73948/131	Container Lid	Plastics, Inc.	Pomroy, James F.	USA	07/142408	11 JA 1988	D 313754	15 JA 1991	G
73948/132	Covered Dish	Plastics, Inc.	Pomroy, James F. Danley, Allen H.	USA	07/337102	11 AP 1989	D 326797	09 JE 1992	G
73948/133	Plate	Plastics, Inc.	Melamed, Stephen Heiligenstein, Luc	USA	07/690303	30 NO 1990	D 338136	10 AU 1993	G
73948/134	Bowl	Plastics, Inc.	Andress, Bradley W.	USA	07/620308	30 NO 1990	D 338375	17 AU 1993	G
73948/135	Pizza Tray	Plastics, Inc.	Pomroy, James F. Eby, Gilbert L.	USA	07/812979	19 DE 1991	D 344875	08 MR 1994	G
73948/136	Canister	Plastics, Inc.	Vanvalkenburg, Terry Andress, Bradley W. Davis, Gregg H. Koenig, John W.	USA	29/006043	22 MR 1993	D 350843	27 SE 1994	G
73948/137	Container	Plastics, Inc.	Vanvalkenburg, Terry Andress, Bradley, W. Davis, Gregg H. Koenig, John W.	USA	29/006052	22 MR 1993	D 350875	27 SE 1994	G

ANCHOR HOCKING PLASTICS PATENT STATUS REPORT
July 14, 1998

Docket No.	Title	Current Owner	Inventor(s)	Cty	Appl. No.	Appl. Date	Patent No.	Patent Date	Status
73948/138	Dry Food Storage Container	Plastics, Inc.	Vanvalkenburg, Terry Andress, Bradley W. Davis, Gregg M. Koenig, John W.	USA	29/006054	22 MR 1993	D 350876	27 SE 1994	G
73948/139	Bottle	Plastics, Inc.	Vanvalkenburg, Terry Andress, Bradley W. Davis, Gregg H. Koenig, John W.	USA	29/006045	22 MR 1993	D 350877	27 SE 1994	G
73948/140	Food Storage Container	Plastics, Inc.	Vanvalkenburg, Terry Andress, Bradley W. Davis, Gregg M. Koenig, John W.	USA	29/006046	22 MR 1993	D 350880	27 SE 1994	G
73948/141	Lettuce Container	Plastics, Inc.	Vanvalkenburg, Terry Andress, Bradley W. Davis, Gregg M. Koenig, John W.	USA	29/006042	22 MR 1993	D 350881	27 SE 1994	G
73948/142	Food Storage Container	Plastics, Inc.	Vanvalkenburg, Terry Andress, Bradley W. Davis, Gregg M. Koenig, John W.	USA	29/006084	22 MR 1993	D 355814	28 FE 1995	G
73948/143	Pitcher	Plastics, Inc.	Andress, Bradley W. Davis, Gregg M. Vanvalkenburg, Terry Koenig, John W.	USA	29/006244	22 MR 1993	D 356004	07 MR 1995	G

ANCHOR HOCKING PLASTICS PATENT STATUS REPORT
July 14, 1998

Docket No.	Title	Current Owner	Inventor(s)	Cty	Appl. No.	Appl. Date	Patent No.	Patent Date	Status
73948/144	Disposable Plate	Plastics, Inc.	Andreas, Bradley W. Simmons, Sean H.	USA	29/024112	08 JE 1994	D 362157	12 SE 1995	G
73948/145	Food Storage Container	Plastics, Inc.	Andreas, Bradley W. Davis, Gregg M. Vanvalkenburg, Terry Koenig, John W.	USA	29/006053	22 MR 1993	D 358302	16 MY 1995	G
73948/146	Disposable Tumbler	Plastics, Inc.	Andreas, Bradley W. Simmons, Sean H.	USA	29/024111	08 JE 1994	D 362786	03 OC 1995	G
73948/147	Champagne Glass	Plastics, Inc.	Andreas, Bradley W.	USA	29/024113	08 JE 1994	D 364996	12 DE 1995	G
73948/149	Double Seal Container	Plastics, Inc.	Andreas, Bradley W. Rude,Dale V. Vankeuren, Dick E.	CANA	2119490	21 MR 1994			F
73948/150	Portable Turntable for Ovens	Plastics, Inc.	Pomeroy, James F. Colato, Albert E.	CANA	373235	17 MR 1981	1155672	25 OC 1983	G
73948/151	Portable Turntable with a Low Profile Drive Motor Assembly	Plastics, Inc.	Danley, Allen M.	CANA	432285	12 JL 1983	1210823	02 SE 1986	G
73948/152	Turntable Accessory for Ovens	Plastics, Inc.	Pomroy, James F. Colato, Albert E.	CANA	518824	23 SE 1986	1226907	15 SE 1987	G
73948/153	Lunch Holder	Plastics, Inc.	Pomroy, James F. Traxler, Eva M.	CANA	2073303	07 JL 1992	2073303	13 AU 1996	G
73948/154	Disposable Tumbler	Plastics, Inc.	Andress, Bradley W. Simmons, Sean H.	CANA	1994-2428	07 DE 1994	D 76292	27 AP 1995	G

ANCHOR HOCKING PLASTICS PATENT STATUS REPORT
July 14, 1998

Docket No.	Title	Current Owner	Inventor(s)	Cty	Appl. No.	Appl. Date	Patent No.	Patent Date	Status
73948/155	Disposable Plate	Plastics, Inc.	Andreas, Bradley W. Simmons, Sean H.	CANA	1994-2429	07 DE 1994	D 76293	27 AP 1995	G
73948/156	Champagne Glass	Plastics, Inc.	Andreas, Bradley W.	CANA	1994-2430	07 DE 1994	D 76294	27 AP 1995	G
73948/157	Bottle With Cap	Plastics, Inc.	Vanvalkenburg, Terry Andreas, Bradley W. Davis, Gregg M. Koenig, John W.	CANA	22-03-93-6	22 SE 1993	D 76631	22 JE 1995	G
73948/158	Container With Cap	Plastics, Inc.	Vanvalkenburg, Terry Andreas, Bradley W. Davis, Gregg M. Koenig, John W.	CANA	22-03-93-7	22 SE 1993	D 76632	22 JE 1995	G
73948/159	Lettuce Container	Plastics, Inc.	Vanvalkenburg, Terry Andreas, Bradley W. Davis, Gregg M. Koenig, John W.	CANA	1994-1814	22 SE 1993	D 76633	22 JE 1995	G
73948/160	Container With Cap	Plastics, Inc.	Vanvalkenburg, Terry Andreas, Bradley W. Davis, Gregg M. Koenig, John W.	CANA	1994-1815	22 SE 1993	D 76634	22 JE 1995	G
73948/161	Container with a Cap	Plastics, Inc.	Vanvalkenburg, Terry Andreas, Bradley W. Davis, Gregg M. Koenig, John W.	CANA	1994-1816	22 SE 1993	D 76635	22 JE 1995	G

ANCHOR HOCKING PLASTICS PATENT STATUS REPORT
July 14, 1998

Docket No.	Title	Current Owner	Inventor(s)	Cty	Appl. No.	Appl. Date	Patent No.	Patent Date	Status
73948/162	Container	Plastics, Inc.	Vanvalkenburg, Terry Andress, Bradley W. Davis, Gregg M. Koenig, John W.	CANA	1994-1822	22 SE 1993	D 76636	22 JE 1995	G
73948/163	Container With a Cap	Plastics, Inc.	Vanvalkenburg, Terry Andress, Bradley W. Davis, Gregg M. Koenig, John W.	CANA	1995-0890	22 SE 1993	D 76637	22 JE 1995	G
73948/164	Turntable	Plastics, Inc.	Danley, Allen N. Colato, Albert E.	FRAN	77847	22 AU 1979	D 77847	22 AU 1979	G
73948/169	Double Seal Container	Plastics, Inc.	Andress, Bradley W. Rude, Dale V. Vankeuren, Dick E.	GBRI	9405008.5	15 MR 1994	2276873	30 AP 1997	G
73948/166	Double Seal Container	Plastics, Inc.	Andress, Bradley W. Rude, Dale V. Vankeuren, Dick E.	JAPA	6-76637	22 MR 1994	2627720	18 AP 1997	G
73948/168	Double Seal Container	Plastics, Inc.	Andress, Bradley W. Rude, Dale V. Vankeuren, Dick E.	THAI	021858	22 MR 1994			F

CERTAIN INTANGIBLE RIGHTS

(Attached Hereto)

[INTELLECTUAL PROPERTY
ACQUIRED IN TENEX ACQUISITION]

Int. Cl.: 21

Prior U.S. Cl.: 2

United States Patent and Trademark Office

Reg. No. 1,868,349
Registered Dec. 20, 1994

TRADEMARK
PRINCIPAL REGISTER

VANITIES

TENEX CORPORATION (ILLINOIS CORPORATION)
1850 ESTES AVENUE
ELK GROVE, IL 60007

FOR: STORAGE CONTAINERS FOR HOUSEHOLD OR KITCHEN USE (NOT OF PRECIOUS METAL), IN CLASS 21 (U.S. CL. 2).

FIRST USE 11-16-1993; IN COMMERCE 11-16-1993.

SER. NO. 74-476,898, FILED 1-6-1994.

JOSETTE THOMPSON, EXAMINING ATTORNEY

The United States of America

CERTIFICATE OF REGISTRATION

This is to certify that the records of the Patent and Trademark Office show that an application was filed in said Office for registration of the Mark shown herein, a copy of said Mark and pertinent data from the Application being annexed hereto and made a part hereof,

And there having been due compliance with the requirements of the law and with the regulations prescribed by the Commissioner of Patents and Trademarks,

Upon examination, it appeared that the applicant was entitled to have said Mark registered under the Trademark Act of 1946, as amended, and the said Mark has been duly registered this day in the Patent and Trademark Office on the

PRINCIPAL REGISTER

to the registrant named herein.

This registration shall remain in force for TEN years unless sooner terminated as provided by law.

In Testimony Whereof I have hereunto set my hand and caused the seal of the Patent and Trademark Office to be affixed this twentieth day of December 1994.

Bruce Lehman

Commissioner of Patents and Trademarks

TRADEMARK
REEL: 1815 FRAME: 0801

NOTICE

This Registration will be canceled by the Commissioner of Patents and Trademarks at the end of six years following the date of registration, unless within one year next preceding the expiration of such six years, the registrant files in the Patent and Trademark Office an affidavit showing that said mark is in use in Commerce or showing that its nonuse is due to special circumstances which excuse such nonuse and is not due to any intention to abandon the mark. A fee of $100.00 for each class must accompany the affidavit.

Int. Cl.: 20

Prior U.S. Cls.: 2, 13, 22, 25, 32 and 50

United States Patent and Trademark Office

Reg. No. 1,992,582

Registered Aug. 13, 1996

TRADEMARK
PRINCIPAL REGISTER

kids' kart

TENEX CORPORATION (ILLINOIS CORPORATION)
1850 EAST ESTES AVENUE
ELK GROVE VILLAGE, IL 60007

FOR: CHILDREN'S FURNITURE AND NON-METAL STORAGE DEVICES, NAMELY MOBILE STORAGE CONTAINERS HAVING LIDS THAT FUNCTION AS LAPBOARDS, IN CLASS 20 (U.S. CLS. 2, 13, 22, 25, 32 AND 50).

FIRST USE 8-0-1994; IN COMMERCE 10-1-1994.

NO CLAIM IS MADE TO THE EXCLUSIVE RIGHT TO USE "KIDS' CART", APART FROM THE MARK AS SHOWN.

SER. NO. 74-621,633, FILED 1-17-1995.

KEVIN PESKA, EXAMINING ATTORNEY

The United States of America

CERTIFICATE OF REGISTRATION

This is to certify that the records of the Patent and Trademark Office show that an application was filed in said Office for registration of the Mark shown herein, a copy of said Mark and pertinent data from the Application being annexed hereto and made a part hereof,

And there having been due compliance with the requirements of the law and with the regulations prescribed by the Commissioner of Patents and Trademarks,

Upon examination, it appeared that the applicant was entitled to have said Mark registered under the Trademark Act of 1946, as amended, and the said Mark has been duly registered this day in the Patent and Trademark Office on the

PRINCIPAL REGISTER

to the registrant named herein.

This registration shall remain in force for TEN years unless sooner terminated as provided by law.

In Testimony whereof I have hereunto set my hand and caused the seal of the Patent and Trademark Office to be affixed this thirteenth day of August 1996.

Bruce Lehman

Commissioner of Patents and Trademarks

NOTICE

This Registration will be canceled by the Commissioner of Patents and Trademarks at the end of six years following the date of registration, unless within one year next preceding the expiration of such six years, the registrant files in the Patent and Trademark Office an affidavit showing that said mark is in use in Commerce or showing that its nonuse is due to special circumstances which excuse such nonuse and is not due to any intention to abandon the mark. A fee of $100.00 for each class must accompany the affidavit.

Int. Cl.: 20

Prior U.S. Cls.: 2, 13, 22, 25, 32 and 50

Reg. No. 2,064,464

United States Patent and Trademark Office

Registered May 27, 1997

TRADEMARK
PRINCIPAL REGISTER

CREATE A CART

TENEX CORPORATION (ILLINOIS CORPORATION)
1850 EAST ESTES AVENUE
ELK GROVE VILLAGE, IL 60007

FOR: PACKAGED ACCESSORIES FOR STORAGE CARTS, NAMELY, PLASTIC CASTERS AND PLASTIC FRAMES, IN CLASS 20 (U.S. CLS. 2, 13, 22, 25, 32 AND 50).

FIRST USE 2-24-1995; IN COMMERCE 2-24-1995.

NO CLAIM IS MADE TO THE EXCLUSIVE RIGHT TO USE "CART", APART FROM THE MARK AS SHOWN.

SER. NO. 74-708,513, FILED 6-29-1995.

JOHN TANG, EXAMINING ATTORNEY

The United States of America

CERTIFICATE OF REGISTRATION
PRINCIPAL REGISTER

The Mark shown in this certificate has been registered in the United States Patent and Trademark Office to the named registrant.

The records of the United States Patent and Trademark Office show that an application for registration of the Mark shown in this Certificate was filed in the Office, that the application was examined and determined to be in compliance with the requirements of the law and with the regulations prescribed by the Commissioner of Patents and Trademarks, and that the Applicant is entitled to registration of the Mark under the Trademark Act of 1946, as Amended.

A copy of the Mark and pertinent data from the application are a part of this certificate.

This registration shall remain in force for TEN (10) years, unless terminated earlier as provided by law, and subject to compliance with the provisions of Section 8 of the Trademark Act of 1946, as Amended.

Bruce Lehman

Commissioner of Patents and Trademarks

Maintenance Requirements

Section 8: This registration will be cancelled after six (6) years by the Commissioner of Patents and Trademarks, ***UNLESS, before the end of the sixth year following the date of registration shown on this certificate***, the registrant files in the U.S. Patent and Trademark Office an affidavit of continued use as required by Section 8 of the Trademark Act of 1946, 15 U.S.C. §1058, as Amended. **It is recommended that the Registrant contact the Patent and Trademark Office approximately five years after the date shown on this registration to determine the requirements and fees for filing a Section 8 affidavit that are in effect at that time.** Currently a fee and a specimen showing how the mark is used in commerce are required for ***each*** international class of goods and/or services identified in the certificate of registration and both must be enclosed with the affidavit.

Section 9: This registration will expire by law after ten (10) years, *UNLESS, before the end of the tenth year following the date of registration shown on this certificate*, the registrant files in the U.S. Patent and Trademark Office an application for renewal of the registration as required by Section 9 of the Trademark Act of 1946, 15 U.S.C. §1059, as Amended. **It is recommended that the Registrant contact the Patent and Trademark Office approximately nine years after the date shown on this registration to determine the requirements and fees for filing a Section 9 application for renewal that are in effect at that time.** Currently a fee and a specimen showing how the mark is used in commerce are required for ***each*** international class of goods and/or services identified in the certificate of registration and both must be enclosed with the application for renewal.

SCHEDULE 2.1(iv)

DESIGN PATENT

(Attached Hereto)

United States Patent [19]

Staubitz et al.

US00D359850S

[11] **Patent Number: Des. 359,850**

[45] **Date of Patent: ** Jul. 4, 1995**

[54] **STORAGE CRATE**

[75] Inventors: **Robert Staubitz**, Collinsville; **Timothy Repp**, New Hartford, both of Conn.

[73] Assignee: **Tenex Corporation**, Elk Grove, Ill.

[**] Term: **14 Years**

[21] Appl. No.: **19,755**

[22] Filed: **Mar. 10, 1994**

[52] U.S. Cl. D3/314

[58] Field of Search ..... D3/304, 307-314; D8/320; D9/432, 443; D32/37; 206/503, 507, 510; 220/676, 752, 755, 771, 913, DIG. 2, DIG. 12, DIG. 14, DIG. 15

[56] **References Cited**

U.S. PATENT DOCUMENTS

D. 231,331	4/1974	Stauble	D3/312
D. 301,201	5/1989	King	D8/320
D. 350,423	9/1994	Craft et al.	D32/37
1,234,730	7/1917	Chapman	220/676
3,270,713	9/1966	Rubricius	229/120.1 X
4,205,749	6/1980	Carroll et al.	206/507

Primary Examiner—Terry A. Wallace
Assistant Examiner—Richelle Shelton
Attorney, Agent, or Firm—Niro, Scavone, Haller & Niro

[57] **CLAIM**

The ornamental design for the storage crate, as shown.

DESCRIPTION

FIG. 1 is a top front left side perspective view of a storage crate showing our new design;
FIG. 2 is a right side elevation view thereof;
FIG. 3 is a rear elevation view thereof;
FIG. 4 is a top plan view thereof; and,
FIG. 5 is a bottom plan view thereof.

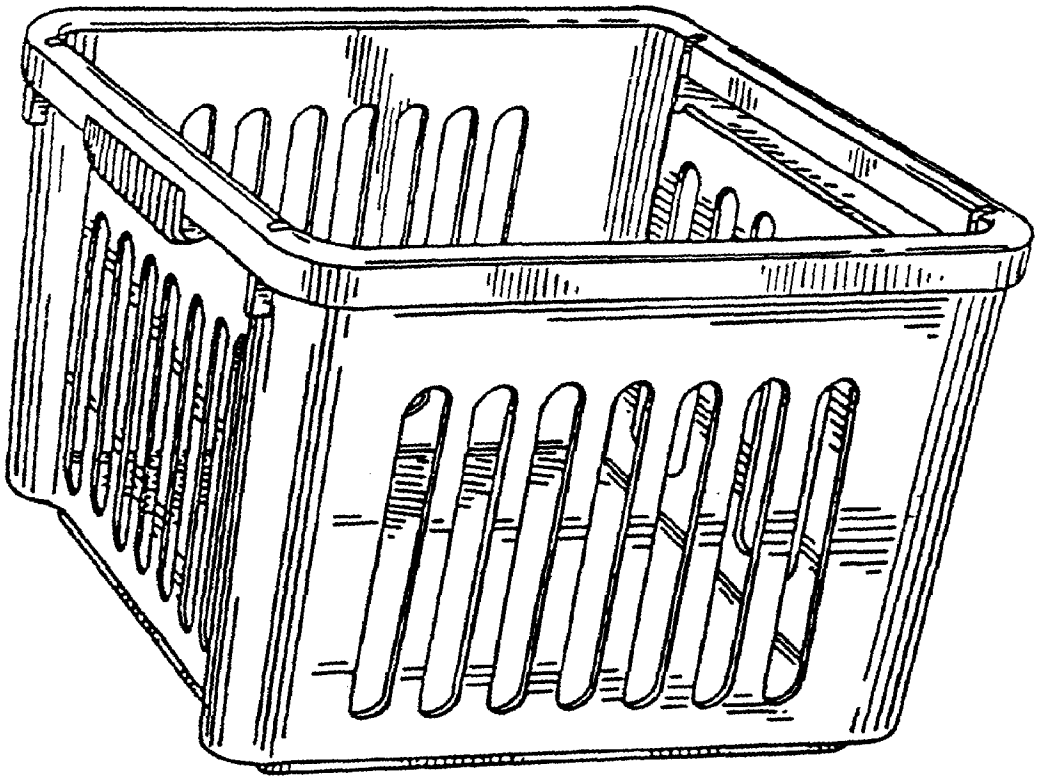

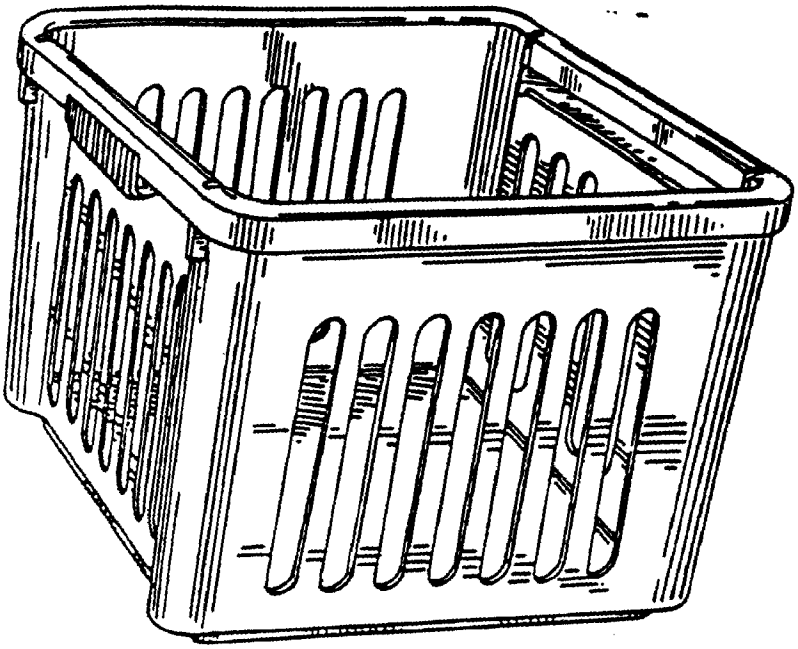

Fig. 1

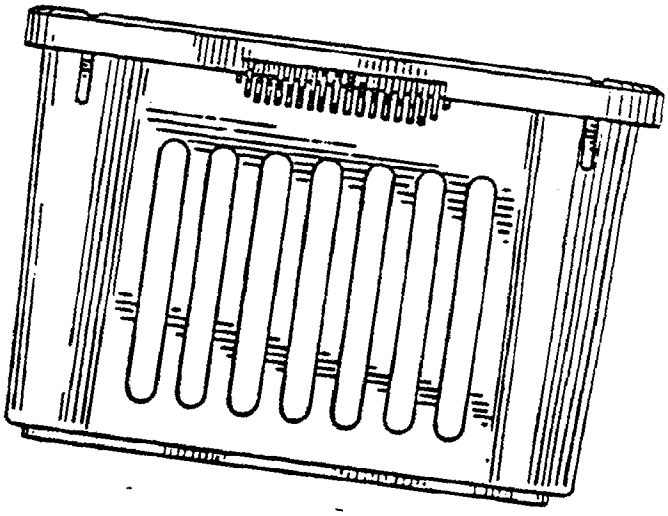

Fig. 2

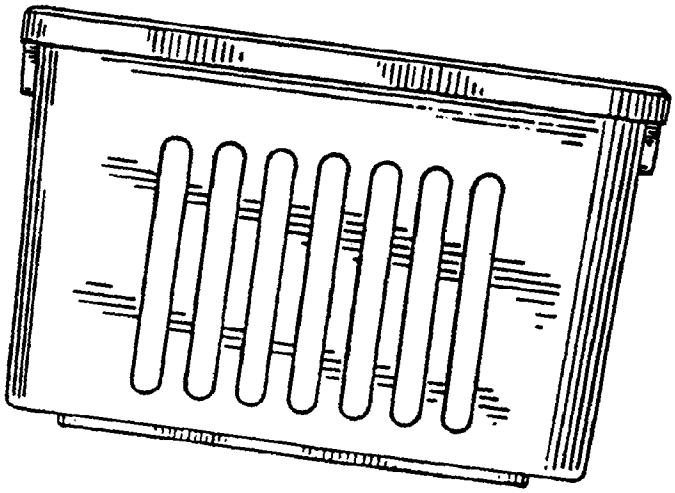

Fig. 3

Fig. 4

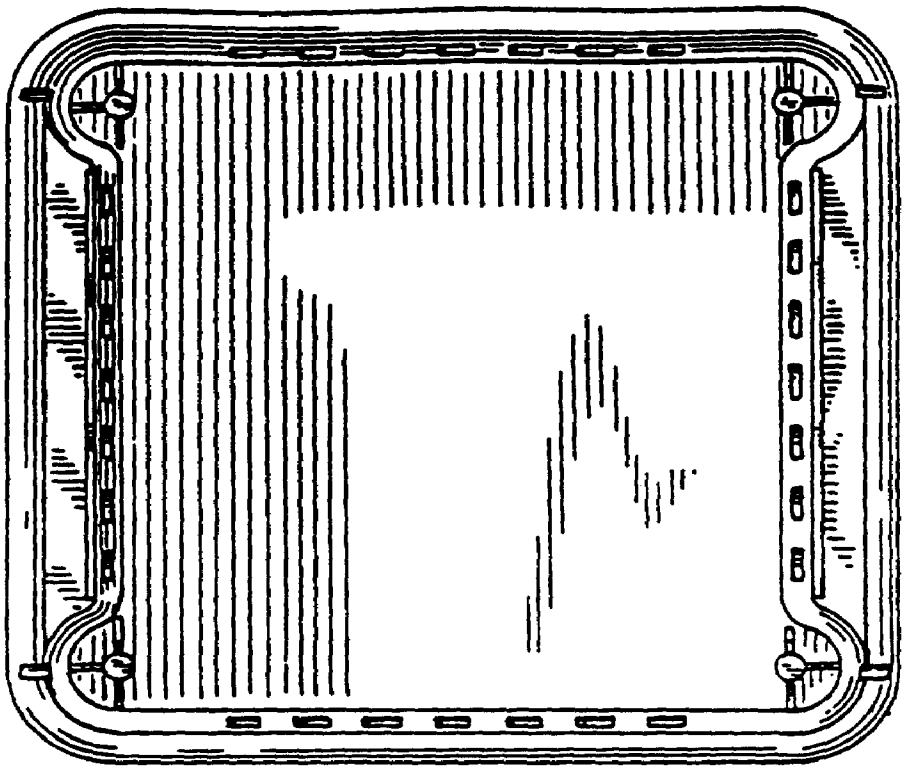

Fig. 5

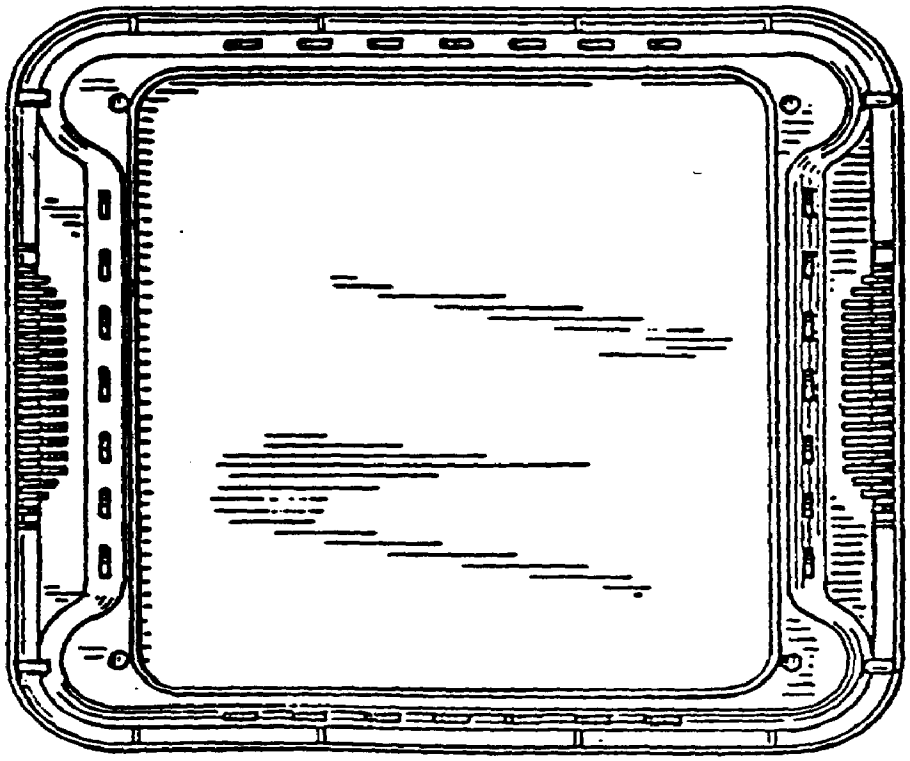

The United States of America

The Commissioner of Patents and Trademarks

Has received an application for a new, original, and ornamental design for an article of manufacture. The title and description of the design are enclosed. The requirements of law have been complied with, and it has been determined that a patent on the design shall be granted under the law.

Therefore, this

United States Patent

Grants to the person or persons having title to this patent the right to exclude others from making, using or selling the design throughout the United States of America for the term of fourteen years from the date of this patent.

Bruce Lehman

Commissioner of Patents and Trademarks

Diane Terry

Attest

OPIC
OFFICE DE LA PROPRIÉTÉ INTELLECTUELLE DU CANADA

CIPO
CANADIAN INTELLECTUAL PROPERTY OFFICE

CERTIFICAT D'ENREGISTREMENT

CERTIFICATE OF REGISTRATION

DESSIN INDUSTRIEL - INDUSTRIAL DESIGN

N° d'enregistrement - Registration no.	Date d'enregistrement - Registration date
76385	May 11, 1995

Je certifie par les présentes que le dessin identifié ci-dessus et tel quel représenté en annexe a été enregistré conformément à la Loi sur les dessins industriels.

I hereby certify that the industrial design identified above and shown herein has been duly registered in accordance with the Industrial Design Act.

L'enregistrement est valide pour dix ans à compter de la date des présentes à condition de paiement du droit prescrit pour le maintien de l'enregistrement.

The registration is valid for ten years from the date shown subject to payment of the prescribed maintenance fees.

Commissaire des brevets - Commissioner of Patents

Industrie Canada Industry Canada

Canada

TRADEMARK
REEL: 1815 FRAME: 0814

76385

APPLICATION FOR REGISTRATION OF AN INDUSTRIAL DESIGN

The applicant, TENEX CORPORATION

whose complete address is 1850 East Estes, Elk Grove Village, Ill., 60007, U.S.A. hereby requests registration of a design for a

"Storage Crate"

of which the applicant is the proprietor.

The design was not, to the proprietor's knowledge, in use by any person other than the first proprietor at the time the design was adopted by the first proprietor.

Description of the design:

"a generally rectangular body having a bottom and four upstanding sides with a peripheral rim about the upper edges of the sides, the corners of the sides being rounded and two opposed sides being inwardly indented from top to bottom; thereby defining substantially semi-circular corners when seen in top and bottom views; a plurality of laterally spaced ribs extending downwardly inwardly from the peripheral rim above said indented sides and each side having a plurality of vertical elongate, obround, laterally spaced apertures completely therethrough".

Drawing(s)/photograph(s) of the design are included wherein:

FIGURE 1 is a front and top perspective view of the industrial design.

FIGURE 2 is a side perspective view thereof.

FIGURE 3 is a side perspective view thereof.

FIGURE 4 is a top elevational view thereof.

FIGURE 5 is a rear elevational view thereof.

Signed at Ottawa, Ontario, Canada this 9th day of September 1994.

TENEX CORPORATION

Signature of Agent
for the applicant

76385

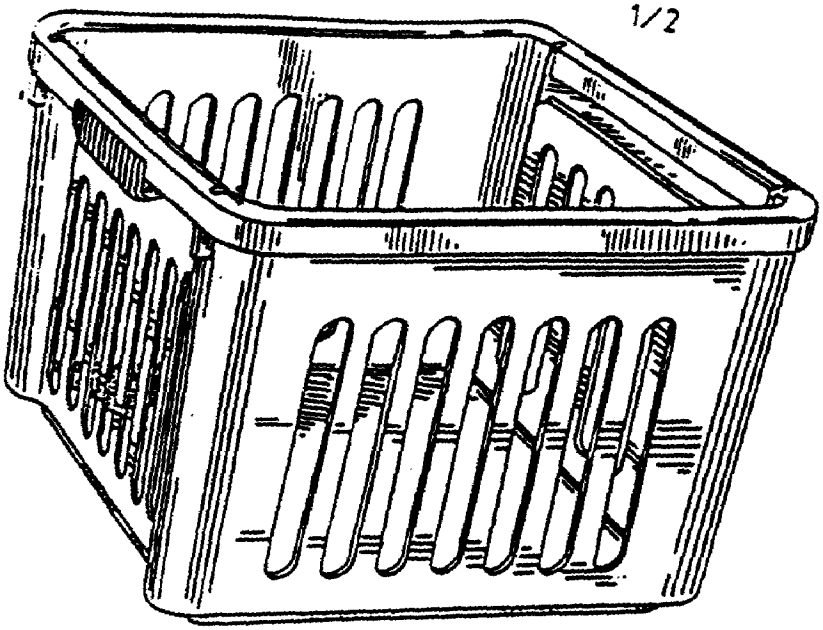

Fig. 1

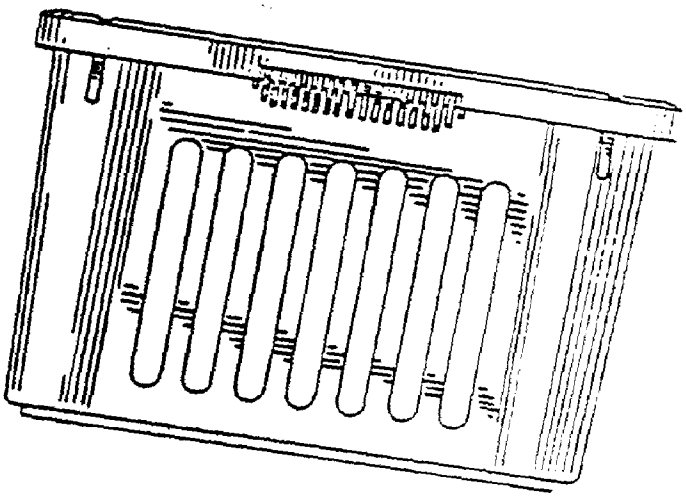

Fig. 2

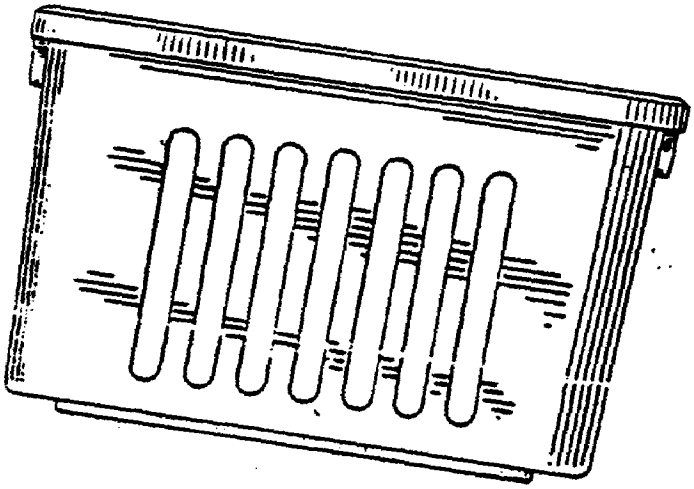

Fig. 3

Fig. 4

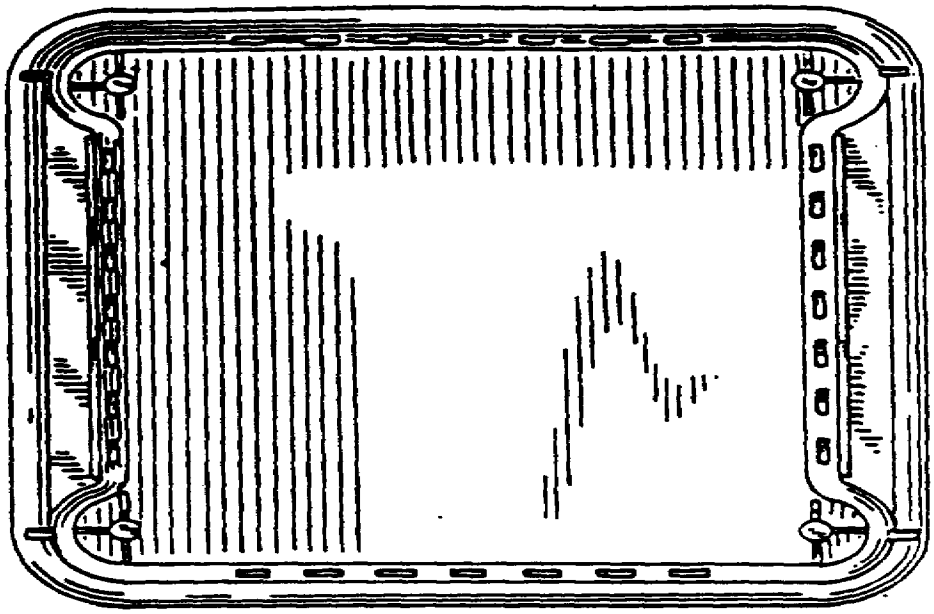
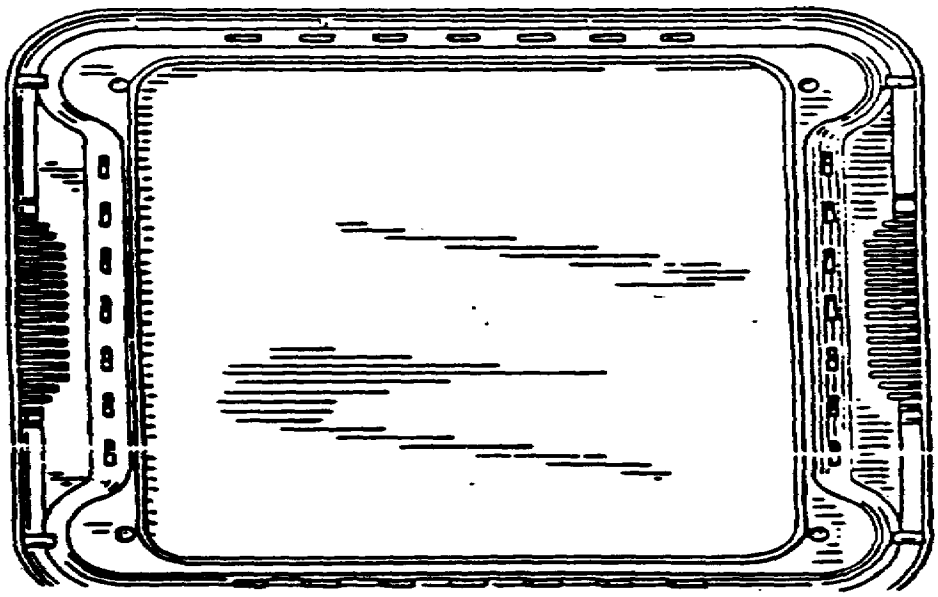
Fig. 5